DOE/EE-0241

Thermal Energy Storage for Space Cooling

Technology for reducing on-peak electricity demand and cost

Thermal energy storage for space cooling, also known as cool storage, chill storage, or cool thermal storage, is a relatively mature technology that continues to improve through evolutionary design advances. Cool storage technology can be used to significantly reduce energy costs by allowing energy-intensive, electrically driven cooling equipment to be predominantly operated during off-peak hours when electricity rates are lower. In addition, some system configurations result in lower first costs and/or lower operating costs compared to non-storage systems.

A survey of approximately 25 manufacturers providing cool storage systems or components identified several thousand current installations, but less than 1% of these were at Federal facilities. With the Federal sector representing nearly 4% of commercial building floor space and 5% of commercial building energy use, Federal utilization would appear to be lagging. The potential cost savings resulting from the application of cool storage systems in the Federal sector is estimated to be $50 million per year. Thus, this *Federal Technology Alert* has been written to reintroduce the concept and make Federal energy managers aware of the latest technologies and energy- and cost-saving opportunities.

Application Domain

The potential for cost-effective application of cool storage systems of one type or another exists in most buildings with a space cooling system. Originally, cool storage technology was developed for integration with chilled water cooling systems that typically serve larger buildings. More recent cool storage developments have included technologies designed for integration with roof-mounted, direct-expansion (DX) cooling systems. Residential-sized cool storage technologies, including smaller versions of the equipment designed for the roof-mounted DX application, have also been developed, but cost economies-of-scale have been difficult to overcome in the residential market.

Although originally developed to shift electrical demand to off-peak periods (from an electric utility's perspective) and to take advantage of low-cost off-peak electric rates (from an end-user's perspective), many applications can also result in lower first costs and/or higher system efficiency compared to non-storage systems. Therefore, while a large differential between on-peak and off-peak kWh charges or a high demand charge definitely improves cool storage economics, cost-effective applications also exist without these benefits. Still, not every cooling system presents a cost-effective application, so careful consideration of site-specific conditions is warranted to determine whether cool storage makes sense or not, which cool storage technology is best, and the optimum configuration for a specific technology.

Photo courtesy of Calmac Manufacturing Corporation

Modular ice-on-coil storage tanks with condenser units above

Federal Technology Alert

A publication series designed to speed the adoption of energy-efficient and renewable technologies in the Federal sector

Prepared by the New Technology Demonstration Program

No portion of this publication may be altered in any form without prior written consent from the U.S. Department of Energy and the authoring national laboratory.

Design Variations

There are many different types of cool storage systems representing different combinations of storage media, charging mechanisms, and discharging mechanisms. The basic media options are water, ice, and eutectic salts. Ice systems can be further broken down into ice harvesting, ice-on-coil, ice slurry, and encapsulated ice options. Ice-on-coil systems may be internal-melt or external-melt and may be charged and discharged with refrigerant or a single-phase coolant (typically a water/glycol mixture). Independent of the technology choice, cool storage systems can be designed to provide full storage or partial storage, with load-leveling and demand-limiting options for partial storage. Finally, storage systems can be operated on a chiller-priority or storage-priority basis whenever the cooling load is less than the design conditions.

Chilled water storage systems rely solely on the sensible (i.e., no phase change or latent energy) heat capacity of water and the temperature difference between supply and return water streams going to and from the cooling load. Ice-on-coil systems come in several variations, as noted above. In all variations, ice is formed on a heat transfer surface (generically referred to as a "coil," whatever the actual configuration or material) without being released during the charging mode and melted away during the discharge mode. Ice-harvesting systems form ice on coils or other refrigerant evaporating surfaces and periodically release the ice into a storage tank that contains a mixture of ice and water. Ice slurry systems produce small particles of ice within a solution of glycol and water, resulting in a slushy mixture that can be pumped. Encapsulated ice systems consist of water contained in plastic containers surrounded by coolant, all contained within a tank or other storage vessel. Eutectic salt systems are similar to encapsulated ice systems, but the plastic enclosures contain a eutectic salt instead of water.

Full storage systems are designed to meet all on-peak cooling loads from storage. Partial storage systems meet part of the cooling load from storage and part directly from the chiller during the on-peak period. Load-leveling partial storage is designed for the chiller to operate at full capacity for 24 hours on the peak demand day. Demand limiting partial storage represents a middle ground between full storage and load-leveling partial storage where chiller operation is reduced but not eliminated during the on-peak period. Storage priority and chiller priority are two alternative operating strategies for cool storage systems with partial storage designs. As the names imply, cooling is preferentially provided from storage with storage priority operation and directly from the chiller with chiller priority operation.

Where to Apply

Cool storage will reduce the average cost of energy consumed and can potentially reduce the energy consumption and initial capital cost of a cooling system compared to a conventional cooling system without cool storage. While most building space cooling applications are potentially attractive candidates, the prospects will be especially attractive if one or more of the following conditions exists.

- Electricity energy charges vary significantly during the course of a day.
- Electricity demand charges are high or ratcheted.
- The average cooling load is significantly less than the peak cooling load.
- The electric utility offers other incentives (besides the rate structure) for installing cool storage.
- An existing cooling system is expanded.
- There is new construction.
- Older cooling equipment needs replacing.
- Cold air distribution benefits can be captured.

What to Avoid

In general, applications lacking the conditions identified above should be avoided. In addition, the following conditions should also be avoided.

- Lack of operation and maintenance experience or training with system equipment, especially where built-up refrigeration systems are used rather than packaged chillers.
- Lack of operator training on operating and control strategies for minimizing cooling system life-cycle costs.
- Sites where the space available for cool storage equipment is limited or has other, more valuable uses.
- Limited resources for engineering feasibility studies and system design. Cool storage systems are inherently more complicated than non-storage systems and extra time will be required to determine the optimum system for a given application.

Disclaimer

This report was sponsored by the United States Department of Energy, Office of Federal Energy Management Programs. Neither the United States Government nor any agency or contractor thereof, nor any of their employees, makes any warranty, express or implied, or assumes any legal liability or responsibility for the accuracy, completeness, or usefulness of any information, apparatus, product, or process disclosed, or represents that its use would not infringe privately owned rights. Reference herein to any specific commercial product, process, or service by trade name, mark, manufacturer, or otherwise, does not necessarily constitute or imply its endorsement, recommendation, or favoring by the United States Government or any agency or contractor thereof. The views and opinions of authors expressed herein do not necessarily state or reflect those of the United States Government or any agency or contractor thereof.

Thermal Energy Storage for Space Cooling

Technology for reducing on-peak electricity demand and cost

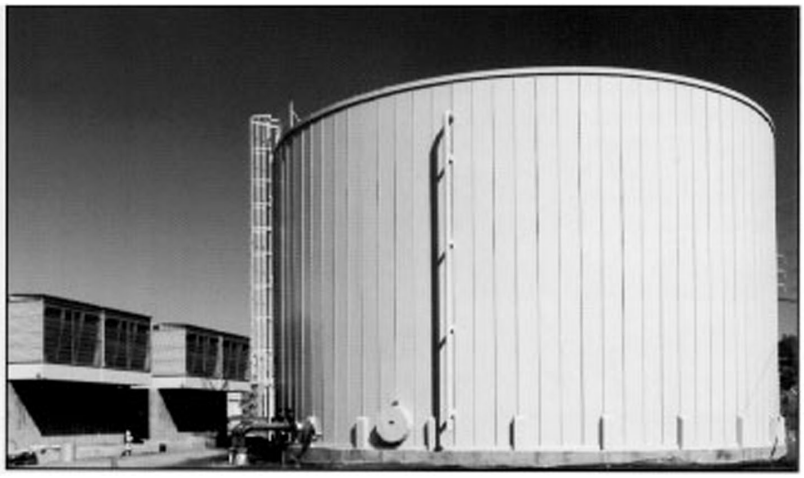

Photo courtesy of Pitt-DesMoines, Inc.

A stratified chilled water storage tank with cooling towers on the left

Federal Technology Alert

Abstract

Cool storage technology can be used to significantly reduce energy costs by allowing energy-intensive, electrically driven cooling equipment to be predominantly operated during off-peak hours when electricity rates are lower. In addition, some system configurations may result in lower first costs and/or lower operating costs. Cool storage systems of one type or another could potentially be cost-effectively applied in most buildings with a space cooling system. A survey of approximately 25 manufacturers providing cool storage systems or components identified several thousand current installations, but less than 1% of these were at Federal facilities. With the Federal sector representing nearly 4% of commercial building floor space and 5% of commercial building energy use, Federal utilization would appear to be lagging. Although current applications are relatively few, the estimated potential annual savings from using cool storage in the Federal sector is $50 million.

There are many different types of cool storage systems representing different combinations of storage media, charging mechanisms, and discharging mechanisms. The basic media options are water, ice, and eutectic salts. Ice systems can be further broken down into ice harvesting, ice-on-coil, ice slurry, and encapsulated ice options. Ice-on-coil systems may be internal melt or external melt and may be charged and discharged with refrigerant or a single-phase coolant (typically a water/glycol mixture). Independent of the technology choice, cool storage systems can be designed to provide full storage or partial storage, with load-leveling and demand-limiting options for partial storage. Finally, storage systems can be operated on a chiller-priority or storage-priority basis whenever the cooling load is less than the design conditions.

The first section describes the basic types of cool storage technologies and cooling system integration options. The next three sections define the savings potential in the Federal sector, present application advice, and describe the performance experience of specific Federal users. A step-by-step methodology illustrating how to evaluate cool storage options is presented next, followed by a case study of a GSA building using cool storage. Latter sections list manufacturers, selected Federal users, and reference materials. Finally, the appendixes give Federal life-cycle costing procedures and results for a case study.

Contents

Abstract 1
About the Technology 5
- Application Domain
- Energy-Saving Mechanism
- Cold Air Distribution
- Other Benefits
- Variations: Storage Media and Mechanisms
- Variations: Design and Operating Strategies
- Installation

Federal Sector Potential 12
- Estimated Savings and Market Potential
- Laboratory Perspective

Application 13
- Application Screening
- Where to Apply
- What to Avoid
- Equipment Integration
- Maintenance Impact
- Equipment Warranties
- Costs
- Utility Incentives and Support

Technology Performance 16
Evaluating Cool Storage Systems 17
- Cooling Requirements
- Identifying Alternatives
- Screening Alternatives
- Refining the Evaluation

Case Study 22
- Facility Description
- Existing Technology Description
- New Technology Equipment Selection
- Savings Potential
- Life-Cycle Cost
- Implementation and Post-Implementation Experience

The Technology in Perspective 23
- The Technology's Development
- Technology Outlook

Manufacturers 24
Who is Using the Technology 25
For Further Information 26
- Associations
- Design and Installation Guides

References 26
Appendix A: Federal Life-Cycle Costing Procedures and the BLCC Software 31
Appendix B: QuickBLCC Results for Case Study 32

About the Technology

Thermal energy storage for space cooling, also known as cool storage, chill storage, or cool thermal storage, is a relatively mature technology that continues to improve through evolutionary design advances. Cool storage technology can be used to significantly reduce energy costs by allowing energy-intensive, electrically driven cooling equipment to be predominantly operated during off-peak hours when electricity rates are lower. In addition, some system configurations result in lower first costs and/or lower operating costs. Unfortunately, cool storage technologies have been underutilized in the Federal sector compared to the private sector. Thus, this *Federal Technology Alert* has been written to reintroduce the concept and make Federal energy managers aware of the latest technologies and energy- and cost-saving opportunities.

Cool storage technologies come in many different forms, each with their pros and cons. The storage media is most commonly water (with "cold" stored in the form of ice, chilled water, or an ice/water slurry), but other media (most notably eutectic salts) have also been used. Storage media can be cooled (charged) by evaporating refrigerant or a secondary coolant (typically a water/glycol mixture). Discharge is usually accomplished directly via circulating water or indirectly via secondary coolant. At least one system has been developed that discharges storage via circulating refrigerant.

Application Domain

Cool storage systems of one type or another could potentially be cost-effectively applied in most buildings with a space cooling system. Originally, cool storage technology was developed for integration with chilled water cooling systems that typically serve larger buildings. More recent cool storage developments have included technologies designed for integration with roof-mounted, direct-expansion (DX) cooling systems. Residential-sized cool storage technologies, including smaller versions of the equipment designed for the roof-mounted DX application, have also been developed, but cost economies-of-scale have been difficult to overcome in the residential market.

Although originally developed to shift electrical demand to off-peak periods (from an electric utility's perspective) and to take advantage of low-cost off-peak electric rates (from an end-user's perspective), many applications can also result in lower first costs and/or higher system efficiency compared to non-storage systems. Therefore, while a large differential between on-peak and off-peak kWh charges or a high demand charge definitely improves cool storage economics, cost-effective applications also exist without these benefits. Still, not every cooling system presents a cost-effective application, so careful consideration of site-specific conditions is warranted to determine whether cool storage makes sense or not, which cool storage technology is best, and the optimum configuration for a specific technology.

A survey of approximately 25 manufacturers providing cool storage systems or components identified several thousand current installations, but less than 1% of these were at Federal facilities. With the Federal sector representing nearly 4% of commercial building floor space and 5% of commercial building energy use, Federal utilization would appear to be lagging.

Energy-Saving Mechanism

Cool storage systems are not commonly thought of as energy-saving technologies. No matter how well insulated, thermal storage systems inevitably suffer some losses as energy flows from warmer bodies to cooler bodies. In addition, both cool and warm water is commonly stored in the same storage tank in chilled water systems to save on tank costs. Mixing is minimized by injecting and removing water from different halves of the tank via specially designed piping to take advantage of natural differences in water density and buoyancy at different temperatures. Still, some mixing and loss of cooling capability are inevitable.

Historically, the driving force for developing cool storage has been reduction of on-peak electric demand and the corresponding reduction of electricity costs. While this is still important, and may be the most important factor affecting application cost-effectiveness, energy savings are possible, and can be a significant benefit when the entire cooling system, and not just the storage media and vessel are considered.

Besides heat gain by the storage media, chillers in cool storage systems operate at lower evaporator temperatures, which increases energy consumption if other conditions remain the same. This is particularly true for ice storage systems, which require the lowest evaporator temperatures. The impact of lower evaporator temperatures is partially or totally offset, however, by the lower condensing temperatures generally experienced when operating a chiller at night rather than during the day. In most parts of the country, dry-bulb temperatures are about 20°F lower and wet-bulb temperatures 5°F lower at night than during the day (MacCracken 1993). Thus, night-time operation improves the efficiency of all chillers, but especially improves the efficiency of air-cooled chillers, where the condensing temperature is controlled by ambient dry-bulb temperature. Chiller efficiency is also improved with storage by allowing more continuous operation at outputs closer to full capacity, thus minimizing part-load losses. In retrofit situations, adding storage to meet peak cooling demands allows the least efficient chillers to be left off or run much less, further increasing savings.

Cool storage systems, with separate charge and discharge cycles, will generally require more pumping. This potential disadvantage can be minimized, however, by increasing the difference between water supply and return temperature by a few degrees, thus reducing

the volume of water that must be circulated. Pumping energy may also be minimized with variable-speed drives.

The energy savings possible with cool storage will vary significantly from site to site, depending on the load profile and the specific cooling system equipment employed. For example, Caldwell and Bahnbleth (1997) reported energy savings ranging from 1–27% for cooling systems with chilled water storage, depending on the load profile. Additional discussion of the energy impacts of cool storage can be found in Bahnbleth and Joyce (1995), Strutz (1995), and Duffy (1992).

Cold Air Distribution

Ice storage systems also present an opportunity for energy savings via cold air distribution. The supply of near-freezing water to air-handling units allows return air to be cooled to a lower temperature. Primary air is distributed at 45°F in a cold air system compared to 55°F in a conventional system, which allows air flow to be reduced by about 40% (ASHRAE 1993). The colder primary air is fully mixed with a portion of the return air to achieve the desired room delivery temperature. Thus, smaller, less costly air handlers and ducting may be installed, with proportional reductions in fan power consumption. Where growing cooling loads have exceeded the capacity of existing air distribution systems, cold air distribution could be implemented to increase capacity without significant renovation to the ducting and air-handling system.

Cooling the primary air to 45°F will also lower conditioned space relative humidity from 60% to 35%, which generally improves the perceived comfort of occupants. This effect may allow a 3°F increase in the dry-bulb temperature set point with the same perceived comfort (MacCracken 1994).

Reducing the size of air-handling equipment lowers construction costs for multistory buildings by reducing the height required per floor for HVAC systems. The cumulative height savings allowed the installation of an extra floor within the same total building height at a high-rise office building in Bellevue, Washington (Hasnain 1998).

Early problems with cold air distribution included fan-powered mixing boxes that negated much of the energy savings, poor air diffusers that created comfort problems, and condensation problems on some surfaces. Improved designs have essentially eliminated the former two problems and condensation problems can be minimized by locating ducts in air-conditioned space. A bibliography of references describing cold air distribution is presented in the *Design Guide for Cool Thermal Storage* (ASHRAE 1993).

Other Benefits

In addition to reducing the average cost of electricity consumed and possibly reducing energy consumption, cool storage can reduce overall cooling system capital and maintenance costs. For new construction, partial storage designs (where the chiller and storage combine to meet peak cooling loads) reduce chiller (and cooling tower and cooling water piping for water-cooled chillers) capacity and cost. Savings in chiller and related costs are often greater than the incremental costs of the partial storage unit. Similarly, adding storage is a way to increase a cooling system's peak capacity without adding new chillers in situations where cooling load is growing. Retrofit of old rooftop air-conditioning systems with cool storage systems can also be less expensive than replacement with new rooftop units. Placement of the cool storage system on the ground avoids expensive crane or helicopter charges associated with replacing the old rooftop unit, which is left in place and modified slightly to work with the storage system. Rooftop replacements may also require structural modifications which can be expensive. Finally, maintenance costs will be less for the down-sized components of the storage system. Included here are costs associated with refrigerant replacement and cooling tower cleaning and water treatment (ASHRAE 1993).

Variations: Storage Media and Mechanisms

There are many different types of cool storage systems representing different combinations of storage media, charging mechanism, and discharging mechanism. The basic media options are water, ice, and eutectic salts. Ice systems can be further broken down into ice harvesting, ice-on-coil, ice slurry, and encapsulated ice options. Ice-on-coil systems may be internal melt or external melt and may be charged and discharged with refrigerant or a single-phase coolant (typically a water/glycol mixture). Independent of the technology choice, cool storage systems can be designed to provide full storage or partial storage, with load-leveling and demand-limiting options for partial storage. Finally, storage systems can be operated on a chiller-priority or storage-priority basis whenever the cooling load is less than the design conditions.

Chilled water storage systems rely solely on the sensible (i.e., no phase change or latent energy) heat capacity of water and the temperature difference between supply and return water streams going to and from the cooling load. As a result, the storage volume required is greater than for any of the ice or eutectic salt options. However, using water eliminates the need for secondary coolants and heat exchangers and standard water chillers can be used without significantly degraded performance or capacity. Water is typically cooled to between 39 and 44°F, or slightly lower than for a standard chilled water system without storage. The return water temperature may be increased slightly as well, but must remain low enough to ensure adequate indoor humidity control. Maximizing the difference between cooling water supply and return temperatures maximizes the sensible energy storage capacity per unit of water and

minimizes the size of the storage tank. A single tank is usually used to store both the chilled water and the warm water returning from the cooling load. Separation of the two water bodies is maximized by placing the cooler, denser water at the bottom of the tank and the warmer water at the top of the tank. Specially designed piping networks called diffusers allow water to enter and leave the tank without causing significant mixing. The result is a layer of cold water separated from a layer of warm water by a thermocline, as shown in Figure 1. Chilled water systems tend to work best in retrofit situations (no chiller modifications required) and/or higher capacity systems where size economies-of-scale lower the unit cost of the tank. A typical chilled water storage system configuration is shown in Figure 2. Chilled water storage tanks may also be used as a reservoir for fire-protection water, reducing total facility costs and/or fire insurance premiums.

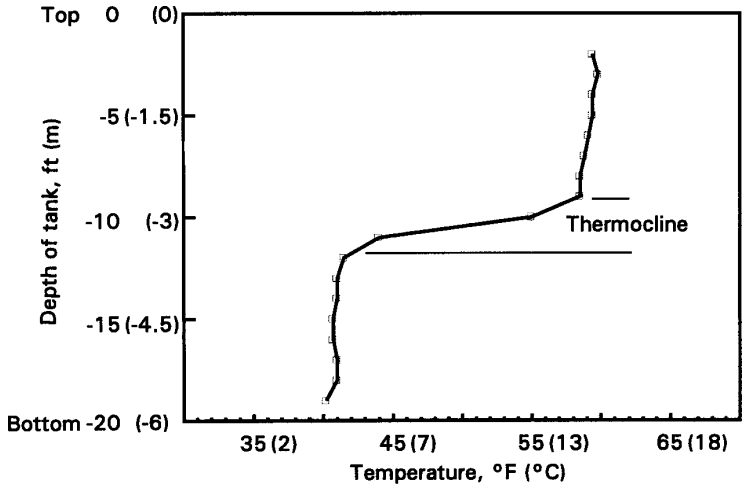

Figure 1. Chilled water stratification.[a]

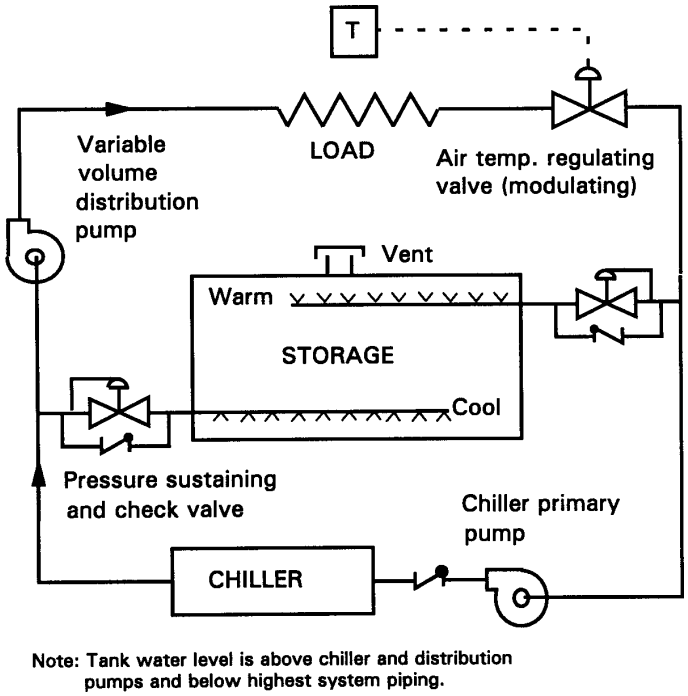

Figure 2. Typical chilled water configuration.[a]

Ice-harvesting systems form ice on coils or other refrigerant evaporating surfaces and periodically release the ice into a storage tank that contains a mixture of ice and water. A typical ice harvesting storage system configuration is shown in Figure 3. Water is pumped from the bottom of the tank and passed over the refrigerant evaporating surface during the charging cycle. During discharge, water is pumped from the tank to the load. Warm water returns from the load and is sprayed onto the top of the ice water mixture to facilitate mixing and heat transfer between ice and water. Compared to ice-on-coil systems, ice harvesters have much less ice-making surface, but the surface is a specialized design to facilitate ice release, so the potential cost savings is not as great as a comparison based on area would suggest. The average thickness of ice on the heat transfer surface is generally less, however, which improves performance. On the other hand, ice harvesters must go through a defrost cycle to release ice from the heat transfer surface, which results in a significant performance penalty. Ice harvesting refrigeration equipment tends to be more expensive

(a) Copyright 1994, American Society of Heating, Refrigerating and Air-Conditioning Engineers, Inc. www.ashrae.org. Reprinted by permission from Design Guide for Cool Thermal Storage.

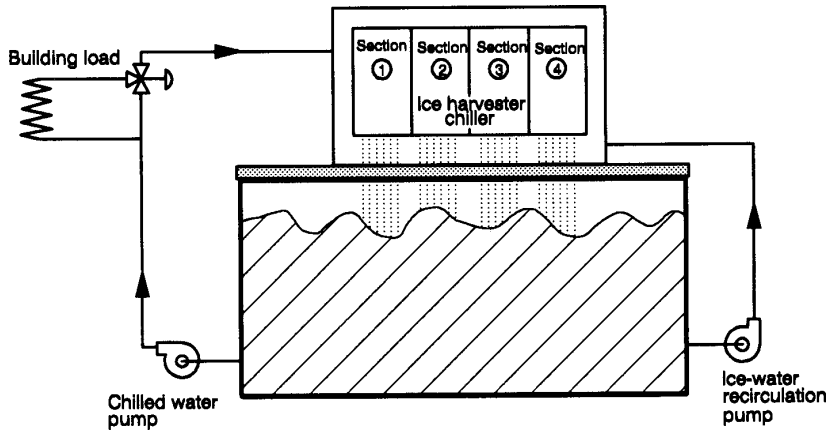

Figure 3. Typical ice-harvesting configuration.[b]

than other cool storage options while the storage capacity itself is generally the least expensive. Thus, ice-harvesting systems are most attractive for applications requiring high storage capacity and relatively low refrigeration capacity.

Ice-on-coil systems come in several variations, as noted above. In all variations, ice is formed on a heat transfer surface (generically referred to as a "coil," whatever the actual configuration or material) without being released during the charging mode and melted away during the discharge mode. Coils are packed in various arrangements within a tank and surrounded by water. Ice is formed by transferring energy from the water to an evaporating refrigerant or secondary coolant (generally a glycol/water mixture) passing through the coils. Discharge is accomplished by circulating warm water past the outside of the ice on external-melt systems while secondary coolant is usually past through the coils on internal-melt systems. Charging and discharging of external-melt and internal-melt systems are illustrated in Figures 4 and 5. At least one internal-melt system designed for retrofit of direct-expansion rooftop cooling equipment is discharged by condensing a refrigerant, but this is an exception to the general use of a secondary coolant. Some external-melt systems bubble air though the water to facilitate uniform freezing and melting of ice. This is not required on internal-melt systems that are frozen solid. Freezing all of the water also results in slightly higher chill storage density for the internal-melt design. External-melt systems are able to avoid using a secondary coolant and coolant/water heat exchangers and also benefit from direct-contact heat exchange. However, if not fully discharged, remaining ice on the coil will result in an efficiency penalty during the subsequent charging cycle. Care must also be taken to avoid

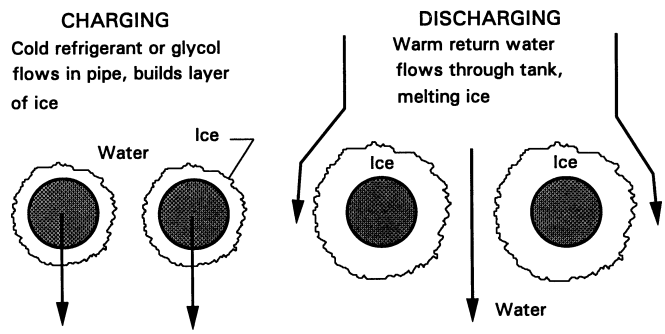

Figure 4. External-melt ice-on-coil.[b]

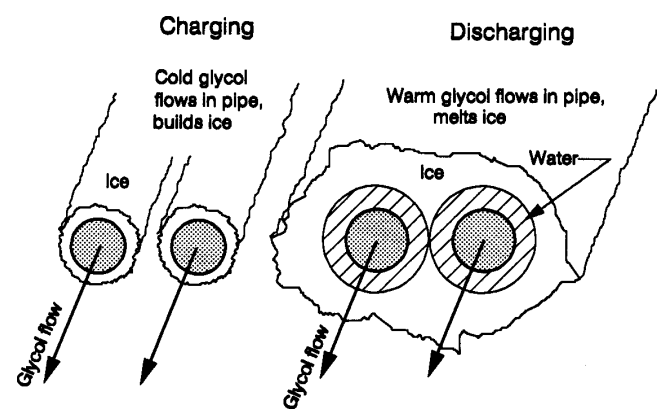

Figure 5. Internal-melt ice-on-coil.[b]

(b) Copyright 1994, American Society of Heating, Refrigerating and Air-Conditioning Engineers, Inc. www.ashrae.org. Reprinted by permission from Design Guide for Cool Thermal Storage.

overcharging the external-melt storage unit solid as it will become increasingly difficult to discharge without adequate water flow passages. Charging with refrigerant is more efficient than with a secondary coolant because one less heat transfer step is involved. On the other hand, charging with a secondary coolant uses much less refrigerant and the refrigeration system is generally less complicated. Typical ice-on-coil system configurations are shown in Figures 6, 7, and 8.

Ice slurry systems produce small particles of ice within a solution of glycol and water, resulting in a slushy mixture that can be pumped. Like ice harvesters, ice slurry generators are dynamic ice-making machines, in contrast to the static ice-on-coil systems. Thus, ice slurry generators do not suffer from the efficiency degradation that occurs as ice builds up on an evaporator surface. However, unlike ice harvesters, no defrost cycle is required for ice slurry generators, which avoids another efficiency loss. In ice slurry systems, ice particles are generated by passing a weak glycol/water solution (~ 5-10% glycol) through tubing that is surrounded by an evaporating refrigerant contained within a shell (i.e., the evaporator unit is a shell-and-tube heat exchanger). As the glycol/water solution is cooled by the evaporating refrigerant, ice particles form. Depending on the system configuration, the resulting slush can either drop directly into a storage tank or be pumped into a storage tank. The latter configuration is illustrated in Figure 9. Ice-free glycol/water solution is pumped from the storage tank. Discharge is accomplished by pumping the cool solution from the tank either directly through the cooling load or through an intermediate heat exchanger that isolates the cooling load from the ice slurry system. Warm solution is returned to the top of the tank and distributed over the ice slurry via multiple spray nozzles.

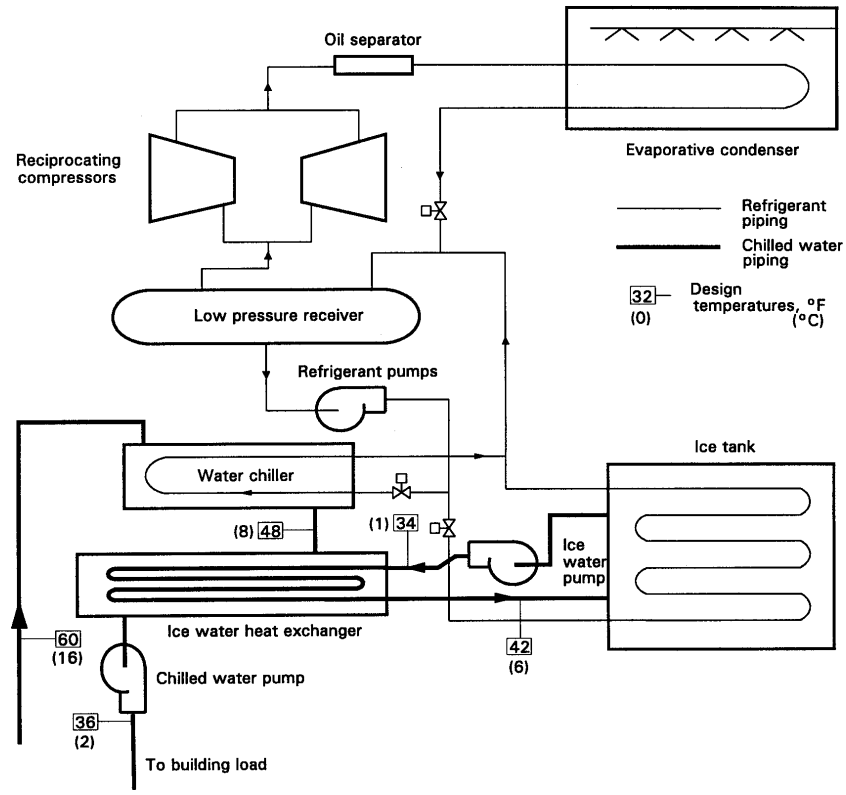

Figure 6. Direct refrigerant external-melt ice-on-coil configuration.[c]

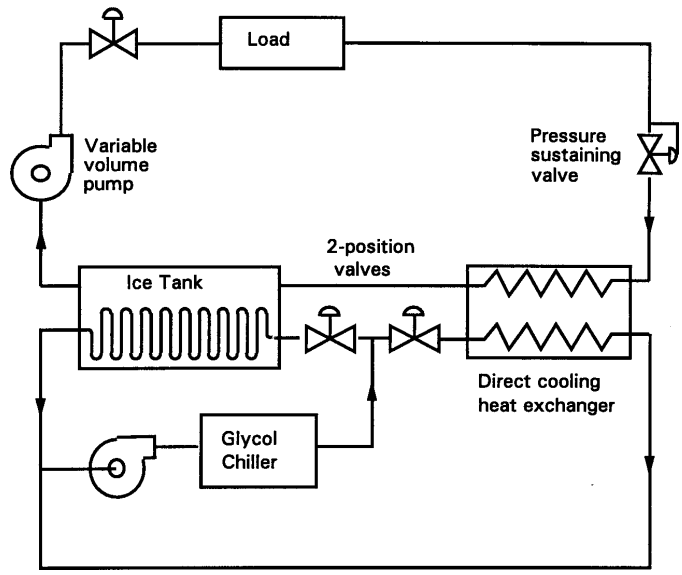

Figure 7. Secondary coolant external-melt ice-on-coil configuration.[c]

(c) Copyright 1994, American Society of Heating, Refrigerating and Air-Conditioning Engineers, Inc. www.ashrae.org. Reprinted by permission from Design Guide for Cool Thermal Storage.

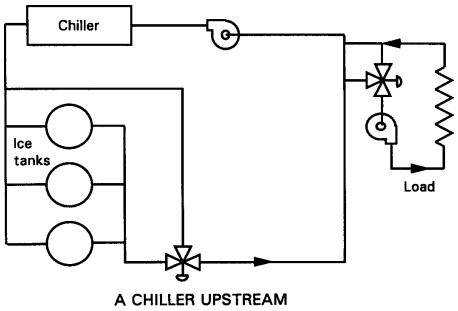

Figure 8. Typical internal-melt ice-on-coil configuration.[d]

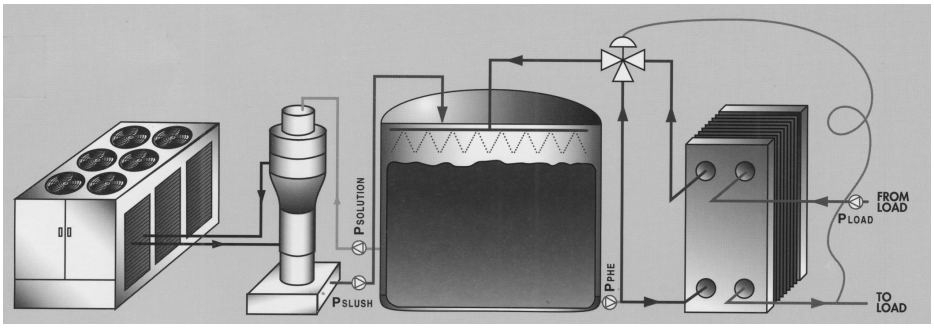

Figure 9. Typical ice slurry configuration.[d]

The small size of the particles results in better heat transfer between the solution and the ice than is possible for either ice harvesting or ice-on-coil systems. Like an ice harvester, ice slurry systems have relatively high fixed costs associated with the evaporator or ice generator component, but relatively low incremental costs as storage capacity is added. Thus, ice slurry systems will look their best in relatively high storage capacity applications.

Encapsulated ice systems consist of water contained in plastic containers surrounded by coolant, all contained within a tank or other storage vessel. During the charging cycle subfreezing coolant from a chiller is circulated through the storage tank and past the plastic containers, freezing the ice. Discharge is accomplished by circulating warm coolant through the tank and past the containers, melting the ice. These two processes are shown in Figure 10. The coolant may be routed directly to the load or be isolated from the load via a heat exchanger. The most common form of plastic container is a dimpled ball about 4 inches in diameter. The spherical shape creates a relatively high heat transfer area per unit of water being frozen, while the dimples allow for expansion and contraction while cycling between liquid and solid states.

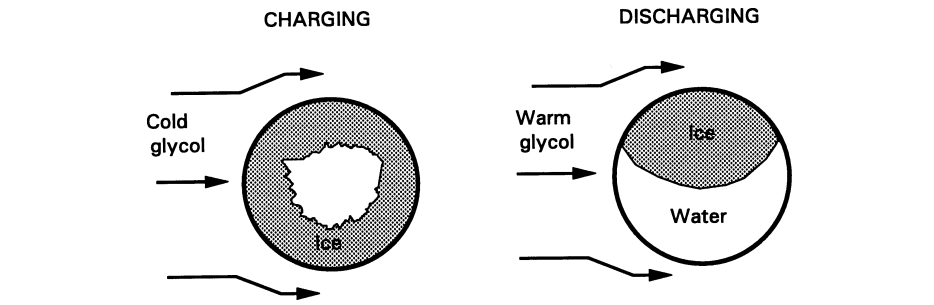

Figure 10. Encapsulated ice balls.[d]

Either atmospheric or pressurized storage tanks can be used, but a screen must be used near the top of an atmospheric tank to keep the balls below the coolant level. Installation is relatively simple; the balls are simply poured into a tank and naturally conform to whatever shape the storage vessel may be. A typical encapsulated ice system configuration is shown in Figure 11.

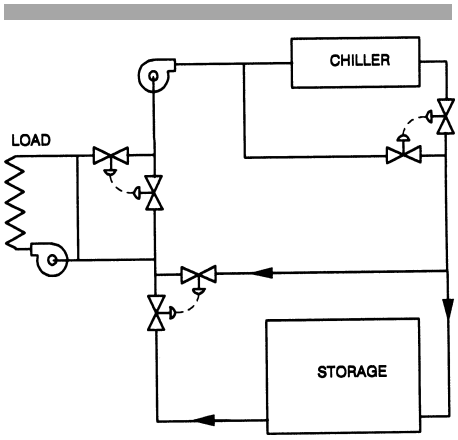

Figure 11. Typical encapsulated ice configuration.[d]

Eutectic salt systems are similar to encapsulated ice systems, but the plastic enclosures contain a eutectic salt instead of water. One type of stacked eutectic salt containers is shown in Figure 12. Eutectic salts made for cool storage applications are typically a combination of inorganic salts, water, and nucleating and stabilizing agents that freeze

(d) Copyright 1994, American Society of Heating, Refrigerating and Air-Conditioning Engineers, Inc. www.ashrae.org. Reprinted by permission from Design Guide for Cool Thermal Storage.

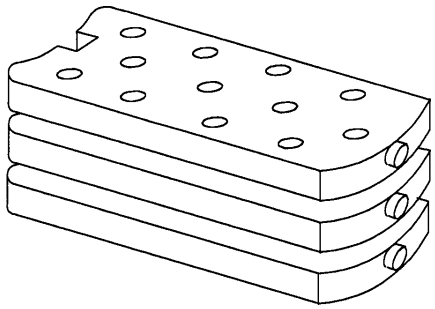

Figure 12. Eutectic salt containers.[e]

at 47°F and have a latent heat of 41 Btu per pound (E Source 1998). This compares to a latent heat of 144 Btu per pound for water. Eutectic salt systems offer higher energy density than chilled water systems and like chilled water systems can be charged with standard chillers without the efficiency penalty of a lower evaporator temperature. The eutectic salts are more expensive than water, of course. In addition, the water temperature leaving a eutectic salt system during discharge will be warmer than normally supplied to a cooling load. This will generally require downstream operation of a chiller (see Figure 13) to further cool the water, unless humidity control is not a concern in the application.

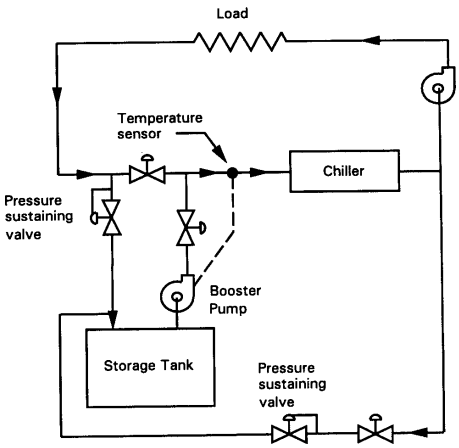

Figure 13. Typical eutectic salt configuration.[e]

Variations: Design and Operating Strategies

Full storage systems, also known as load shifting systems, are illustrated in Figure 14. Full storage systems are designed to meet all on-peak cooling loads from storage. On the peak demand day, the chiller in a full storage system operates at its capacity during off-peak hours to charge storage and meet cooling loads occurring during off-peak hours. This type of system results in larger and, therefore, more expensive chiller and storage units compared to partial storage systems. However, full storage also captures the greatest savings possible by shifting electricity demand from on-peak to off-peak. Full storage systems are relatively attractive when demand charges are high, the differential between on-peak and off-peak energy charges is high and/or when the peak demand period is short.

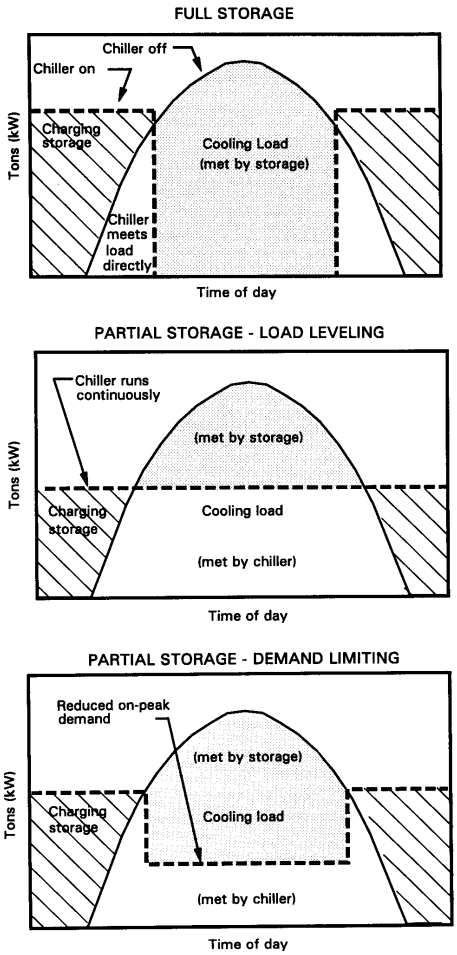

Figure 14. Cool storage design options.[e]

Load leveling and demand limiting versions of **partial storage** systems are also illustrated in Figure 14. In general, partial storage systems meet part of the cooling load from storage and part directly from the chiller during the on-peak period. Load leveling versions are designed for the chiller to operate at full capacity for 24 hours on the peak demand day. Storage is charged when the load is less than the output of the chiller and discharged when the load is greater than the output of the chiller. Load leveling designs minimize the size and cost of chiller and storage components, but achieve less electricity cost savings than full storage systems. Load leveling systems are relatively attractive when electric rate incentives for load shifting are moderate, the ratio of peak to average load is high, and/or the on-peak period is long. Demand limiting partial storage represents a middle ground between full storage and load leveling partial storage where chiller operation is reduced, but not eliminated during the on-peak period. Thus, system size and cost, and electricity cost savings tend to fall between that for the other two design options. Chiller operation in demand-limiting systems may also be controlled to minimize site peak demand, resulting in variable chiller output during the peak demand period.

Storage priority and chiller priority are two alternative operating strategies for cool storage systems with partial storage

(e) Copyright 1994, American Society of Heating, Refrigerating and Air-Conditioning Engineers, Inc. www.ashrae.org. Reprinted by permission from Design Guide for Cool Thermal Storage.

designs. As the names imply, cooling is preferentially provided from storage with storage priority operation and directly from the chiller with chiller priority operation. The preference is mostly driven by the relative cost of providing cooling via either mode. The cost comparison must consider average chiller efficiency and electricity costs per kWh for both modes plus storage efficiency if cooling from storage. Storage priority generally requires a more complex control scheme to ensure that adequate cooling capacity will be available late in the day as storage is being preferentially depleted. Predictions of remaining cooling load must be combined with measurement of remaining cooling capacity and knowledge of chiller capacity to determine the appropriate mix of storage and chiller cooling. Additional discussion of storage priority operating strategies can be found in ASHRAE (1993). Chiller priority control is much simpler. When the cooling load exceeds the capacity of the chiller, storage is discharged to meet the residual demand. No predictions of remaining cooling load for the day are necessary.

Installation

Installation requirements vary significantly among the alternative cool storage systems and depending on whether a new construction or retrofit scenario is being considered. Chilled water or eutectic salt storage systems are the easiest to retrofit because a standard water chiller can be used and secondary coolant loops coupled with additional heat exchangers are not usually employed. Modification or replacement of current chillers is generally required for any of the ice storage systems. This is particularly true for ice harvesting and ice slurry systems because they require specialized evaporators. Ice-on-coil systems charged via evaporating refrigerant or secondary coolant below 18°F will also require new equipment; standard water chillers are usually adequate for chilling a secondary coolant as low as 18°F, albeit at reduced capacity and efficiency compared to chilling water to about 40°F (ASHRAE 1993). Thus, minimal chiller modifications are required for cool storage systems designed to be charged by 18+°F coolant, which includes many ice-on-coil systems plus encapsulated ice systems. Many vendors offer integrated chiller and storage systems that are particularly attractive when replacing conventional cooling systems that are worn out.

Federal Sector Potential

Cool storage technologies have been successfully applied in thousands of non-Federal facilities, but only a few dozen Federal facilities. The potential for successful Federal application would appear to be much greater, however, because Federal facilities tend to have several characteristics that should make cool storage generally more attractive than in other sectors. These characteristics include:

- Relatively large cooling systems that can take advantage of storage system economies-of-scale.
- A preponderance of chilled water cooling systems that are generally easier to integrate with cool storage than cooling systems served by direct-expansion equipment.
- Rate structures characterized by high-demand charges and/or large variation in hourly energy charges.
- Older equipment that needs replacement.

Estimated Savings and Market Potential

Despite the qualitative advantages noted above, it is difficult to quantify the Federal potential (or the non-Federal potential, for that matter) of cool storage systems because of the significant impact that site-specific factors (such as electricity demand profile, electric rate structure, cooling demand profile, existing cooling system equipment, etc.) have on the cost-effectiveness. A truly accurate assessment needs to consider each site on an individual basis. Nevertheless, the market potential for cool storage has been estimated for the U.S. Army by the Construction Engineering Research Laboratory (Sohn and Cler 1990).

The work by Sohn and Cler focused on the potential savings in electricity demand and energy charges from shifting chiller use to off-peak hours. The overall efficiency of the cooling system was presumed to be unaffected by the cool storage system, i.e. there was no net increase or decrease in energy consumption. Incremental capital costs were estimated for two scenarios: new construction or equipment replacement and retrofit. The first scenario allows credit for chiller downsizing, but not the second. Simple rules of thumb were used to establish the size of the cool storage system required to reduce peak electricity demand by either 5% or 10%. Incremental system costs were assumed to be $80/ton-hour for the new construction or equipment replacement scenario and $150/ton-hour for the retrofit scenario. Thus, the only site-specific inputs to the estimate were the electric rates.

The results of the study indicated that cost-effective application (payback period of 10 years or less for government investment) of cool storage systems designed to reduce peak electrical demand by 10% would result in annual savings of about $12 million for the new construction/equipment replacement scenario. This figure was reduced to about $4 million per year for the retrofit scenario. The Army represents about 25% of the total Federal floor space, so a rough estimate of the total Federal potential for cool storage systems would be annual savings of about $50 million.

Laboratory Perspective

Thermal energy storage for space cooling is a relatively mature technology experiencing evolutionary improvements to older concepts, innovation with newer concepts, and extension of applicability

from chilled water systems to packaged rooftop systems. The impetus for considering cool storage systems (from the end-user's perspective rather than the electric utility's perspective) was originally driven by high-demand charges and/or on-peak energy charges and the opportunity to save on energy costs. While electric rates are still a significant motivation for implementing cool storage, many systems are being installed today on the basis of lower first cost and/or lower energy consumption as well.

Cool storage systems have become relatively common in the commercial sector, particularly in applications such as schools that have high ratios of peak to average cooling loads. Federal applications have lagged, however, representing only about 1% of the total population of installed systems. With many Federal facilities having similar characteristics to commercial facilities where cool storage has been successfully installed, broader consideration of cool storage at Federal facilities seems warranted. The rough estimate of Federal sector potential described above also suggests that significantly greater utilization would be beneficial. Still, there are no simple rules-of-thumb that will always identify where cool storage can be cost-effectively applied. The use of cool storage or not and selection of the best cool storage system must be carefully considered via screening studies on a site-specific basis.

Application

This section addresses the technical aspects of applying cool storage technology. The conditions in which cool storage can be best applied are addressed. The advantages, limitations, and benefits of each application are enumerated. Design and integration considerations for the technology are discussed, including equipment and installations costs, installation requirements, maintenance impacts, and utility incentives and support.

Application Screening

Historically, cool storage has been more commonly applied in buildings with relatively high cooling loads, usually served by central chillers coupled with chilled water distribution systems. The majority of applications served peak cooling demands of 100 tons or more and required storage capacities of 500 ton-hours or more (Potter 1994; E-Source 1998). Several manufacturers now offer packaged ice storage systems as small as 100 ton-hours at unit costs that are essentially the same as larger sizes. These smaller storage systems are also being coupled with chillers to retrofit direct-expansion (DX) rooftop cooling systems. One manufacturer has developed a 42 ton-hour storage unit specifically designed for integration with DX cooling systems. Thus, cool storage equipment is available for practically all types of buildings. Cost-effectiveness must be considered on a case-by-case, site-specific basis, however.

Where to Apply

Cool storage will reduce the average cost of energy consumed and may potentially reduce the energy consumption and initial capital cost of a cooling system compared to a conventional cooling system without cool storage. While most building space cooling applications are potentially attractive candidates, the prospects will be especially attractive if one or more of the following conditions exists.

- Electricity energy charges vary significantly during the course of a day.
- Electricity demand charges are high or ratcheted.
- The average cooling load is significantly less than the peak cooling load.
- The electric utility offers other incentives (besides the rate structure) for installing cool storage.
- An existing cooling system is expanded.
- There is new construction.
- Older cooling equipment needs replacing.
- Cold air distribution benefits can be captured.

What to Avoid

In general, applications lacking the conditions identified above should be avoided. In addition, the following conditions should also be avoided.

- Lack of operation and maintenance experience or training with system equipment, especially where built-up refrigeration systems are used rather than packaged chillers.
- Lack of operator training on operating and control strategies for minimizing cooling system life-cycle costs.
- Sites where the space available for cool storage equipment is limited or has other, more valuable uses.
- Limited resources for engineering feasibility studies and system design. Cool storage systems are inherently more complicated than non-storage systems and extra time will be required to determine the optimum system for a given application.

Equipment Integration

The specific integration requirements vary for the different types of cool storage systems. In some cases, multiple integration options exist for a single type of cool storage system. Fundamentally, the storage device separates the generation of chilled coolant from its delivery to air handling units. Thus, an extra piping loop (one for charging and one for discharging storage) with pumps, valves, and controls is required compared to a conventional system. Typical system configurations were shown in

Figures 2, 3, 6, 7, 8, 9, 11, and 13. In addition, a common variation to consider is whether to install the chiller upstream or downstream of the storage unit as shown in Figure 15 for an ice-on-coil system. Installing the chiller in the upstream position increases chiller efficiency because the coolant temperature is higher, but reduces the usable storage capacity because storage is discharged with a lower temperature coolant. The opposite effects occur when the chiller is installed in the downstream position. The two choices present a tradeoff between storage capital costs and chiller operating costs that should be considered in a detailed evaluation of system options.

Maintenance Impact

Chiller and cooling tower maintenance activities with cool storage are essentially the same as for a conventional cooling system. However, the chiller and cooling tower are usually smaller with cool storage, which should generally reduce the cost of replacement parts and specifically reduce refrigerant replacement and cooling tower cleaning and water treatment costs. Chiller and cooling tower maintenance can also be conducted while cooling is provided from storage, which benefits maintenance scheduling.

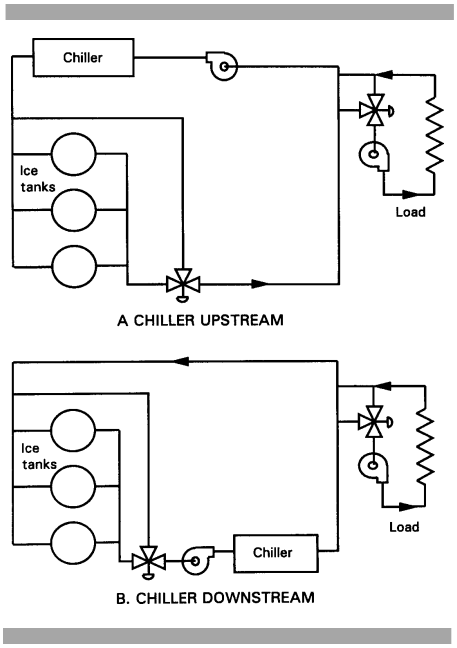

Figure 15. Upstream and downstream chiller configurations.[f]

The addition of a cool storage tank is the most obvious difference from a conventional cooling system, but incremental maintenance requirements tend to be minimal. Water treatment requirements are the same as for non-storage systems, but the volume of water to be treated, hence cost, is greater. Water levels should be checked at least once a year, or more often for open tanks. Special attention needs to be given to the water chemistry in ice harvesting systems where warm return water is highly aerated as it's sprayed on the ice/water mixture within the tank. Detailed discussion of water treatment requirements can be found in Ahlgren (1987).

Systems using glycol must use a version intended for HVAC applications that include corrosion inhibitors and other additives that allow contact with air. Glycol chemistry should be checked annually to ensure that proper concentration of the inhibitors and other additives exist, as well as to ensure maintenance of the intended water/glycol mixture.

Cool storage systems usually have more pumps, control valves, and possibly heat exchangers than conventional cooling systems, with periodic maintenance required for each. Tank inventory sensors will also require periodic calibration. Finally, maintenance of refrigeration equipment such as that used in ice harvesting, external melt ice-on-coil, and ice slurry systems requires different skills than for standard packaged chillers.

Equipment Warranties

A one-year warranty is commonly offered by cool storage system manufacturers on all equipment, parts, and materials. Labor is not usually covered. Specific system components (e.g., the coil in ice-on-coil systems) are warranted for a longer period by some manufacturers. Other manufacturers will guarantee performance in terms of available storage and discharge capacities or the maximum rate of heat gain through the walls of the tank.

Costs

Costs will vary significantly for cool storage systems because of the many different technology options and significant size economies-of-scale for some components, in addition to variation in site-specific conditions and individual vendor offerings. In general, all systems have a chill-generating device and a chill storage device, even if the two devices are closely integrated (e.g., external-melt, ice-on-coil systems). The following cost equations can be used to prepare rough estimates of system costs, suitable for initial screening of alternatives. A more rigorous approach based on site-specific system integration requirements and vendor quotes for major components should be used when refining the initial screening evaluation (see "Refining the Evaluation" below) and preparing the final estimate.

Equations 1 and 2 can be used for estimating the costs of conventional air-cooled reciprocating chillers and water-cooled centrifugal chillers, respectively (Means 1999). As indicated, Equation 1 is generally applicable at capacities

(f) Copyright 1994, American Society of Heating, Refrigerating and Air-Conditioning Engineers, Inc. www.ashrae.org. Reprinted by permission from Design Guide for Cool Thermal Storage.

less than 200 tons, while Equation 2 is generally applicable at sizes greater than 200 tons.[1] Both equations are based on the equipment capacity for producing chilled water at standard ARI rating conditions. Equations 1 and 2 can be used directly to estimate the costs of water chillers used in conventional cooling systems and for systems using chilled water or eutectic salt storage.

(1) Air-Cooled Reciprocating Chiller Installed Cost = $\$11{,}900 + 591*T_{wc}$

Where T_{wc} = nominal water chiller capacity in tons, from 20-200 tons.

(2) Water-Cooled Centrifugal Chiller Installed Cost = $\$57{,}700 + 307*T_{wc}$

Where T_{wc} = nominal water chiller capacity in tons, from 200-1500 tons.

Equations 1 and 2 can also be used for estimating the cost of chillers used to make ice in ice-on-coil storage systems by applying an adjustment factor. Operation at ice-making evaporating temperatures reduces capacity by about 1/3 compared to water chilling; the actual ratio depends on the evaporating temperature required (varies by as much as 10°F depending on the type and specific model of ice-on-coil storage). Alternatively, the equivalent water chilling capacity is about 50% higher than the ice generating capacity. Therefore, the cost of chillers for ice-on-coil storage systems can be estimated using equations 1 or 2 by first multiplying the required ice-generating capacity by 1.5.

Water-cooled systems require cooling towers to cool condenser water. Cooling tower costs can be estimated using Equation 3 (Means 1999). The same equation applies whether the cooling tower is applied to a water-cooling or ice-generating "chiller."

(3) Cooling Tower Installed Cost = $\$982*T_{hr}^{0.64}$

Where T_{hr} = heat rejection capacity in tons, from 60-1000 tons[2]

Dynamic ice-generators are generally more expensive than the chillers used with static ice-on-coil systems. Ice slurry generators are currently offered in modular units resulting in an installed cost of about $1000/ton of ice at capacities of 100 tons or more. Ice-harvesting generators are typically slightly more expensive as indicated by Equation 4 (ASHRAE 1993).

(4) Ice-Harvesting Generator Installed Cost = $\$195{,}000 + 990*T_{ig}$

Where T_{ig} = ice generating capacity in tons, from 200-1000 tons

Chilled-water storage costs depend on the difference between water supply and return temperature in addition to the size of the storage unit. For example, the same equipment would have twice the storage capacity if operated through a 20°F differential compared to a 10°F differential. Alternatively, the same capacity could be achieved with a tank that is 50% smaller. Equations 5 through 7 can be used for estimating chilled water storage costs for three alternative supply and return water temperature design assumptions (EPRI 1992). Similarly, Equation 8 can be used for estimating storage-related costs for dynamic ice systems using ice-harvesting or ice slurry generators. Again, the vessel is essentially the same as for chilled water storage, but costs per ton-hour are lower because of the higher cooling density of ice compared to water.

(5) 10°F (T Chilled Water Storage Installed Cost = $802*(TH)^{0.686}$

Where TH = storage capacity in ton-hours, ton-hours from 600-6000

(6) 15°F ΔT Chilled Water Storage Installed Cost = $616*(TH)^{0.686}$

Where TH = storage capacity in ton-hours, ton-hours from 900-9000

(7) 20°F ΔT Chilled Water Storage Installed Cost = $498*(TH)^{0.686}$

Where TH = storage capacity in ton-hours, ton-hours from 1200-12,000

(8) Dynamic Ice Storage Installed Cost = $211*(TH)^{0.686}$

Where TH = storage capacity in ton-hours, ton-hours from 4,000-40,000

Ice-on-coil and encapsulated ice storage system costs are dominated by the heat transfer surface, which is the piping or coils for the former and the flexible encapsulating material for the latter. Storage capacity, hence cost, is directly proportional to the heat transfer area and the amount of ice that can be generated and stored at full charge per unit of heat transfer area. The installed cost for ice-on-coil and encapsulated ice storage is about $70/ton-hour.[3] Although there could be economies-of-scale associated with the tank or containment vessel, most ice-on-coil systems come in pre-assembled tank and coil packages of moderate individual capacity with larger capacity needs met via multiple tanks. Thus, the cost per ton-hour for these types of systems is usually independent of the number of ton-hours required.

Similar to ice-on-coil and encapsulated ice systems, eutectic salt system costs are dominated by components (the salt and its enclosure) that vary directly in size and cost with the required system capacity. Again, the tank or vessel represents a relatively small portion of the total storage system cost, so its economies-of-scale are overshadowed by the cost of the salt and its enclosure. The installed cost of

[1] In this section and throughout this FTA, a "ton" means 12,000 Btu per hour. This rating is derived from the average hourly cooling rate achieved from melting one ton (2000 pounds) of ice over a 24 hour period (2000 pounds * 144 Btu/pound / 24 hours = 12,000 Btu/hour). Thus, a 100-ton ice generator has a cooling capacity of 1.2 million Btu per hour and would be able to produce roughly 100 tons (200,000 pounds) of ice in 24 hours.

[2] Note that cooling tower capacity is greater than chiller capacity because the energy input to the chiller must be rejected along with the cooling load being served by the chiller.

[3] Based on information collected from Baltimore Air Coil, Calmac, Chester-Jensen, Cryogel, Dunham-Bush, Fafco, and Girton Manufacturing.

eutectic salt storage is about $125/ton-hour (ASHRAE 1993).

In addition to the chiller and storage components, installation of a cool storage system will require miscellaneous pipes, valves, pumps, instrumentation, controls, and possibly heat exchangers. The requirements for this miscellaneous hardware, hence costs, vary significantly depending on site-specific conditions. The costs for these components can be ignored when conducting initial screening studies, but should be estimated from an assessment of specific requirements when preparing the final design evaluation.

Utility Incentives and Support

Utilities offer various forms of financial and technical support for cool storage systems. Examples include rebates specific to cool storage, rebates for peak load reduction, and cost-sharing of feasibility studies. The following utilities provided incentives and/or support specific to cool storage systems as of spring 1999, according to a survey conducted by Energy User News (Cahners Business Information 1999a and 1999b). Other programs, such as those targeting chillers, HVAC, load management, etc., may also apply. Incentive and support programs are subject to change, particularly as the electric utility industry deregulates. Therefore, prospective users of cool storage systems should contact their electric utility to see what incentives are available and applicable.

Alabama Power Company: $100/kW deferred; $5000 for feasibility studies

Baltimore Gas and Electric Company: $200/kW shifted; $15,000 for feasibility studies

Columbia Water and Light: Rate inventive; no specific information available

Delmarva Power and Light: $140/kW shifted with $100,000 maximum

Florida Power and Light: No specific information available

Gainesville Regional Utilities: Rebate based on tonnage; no specific information available

GPU Energy: No specific information available

Houston Power and Lighting: $300/kW shifted

Lansing Board of Water and Light: $100/kW of installed equipment

Northern States Power Company: No specific information available

Pasadena Water and Power Company: $5000 for feasibility studies

Riverside Utility District: $5000 for feasibility studies; $200/kW shifted off peak

South Carolina Public Service Authority: $200/kW shifted off-peak; co-funding of feasibility study

United Illuminating Company: $400/kW shifted or $400/ton shifted; feasibility study grants

Technology Performance

Several thousand cool storage systems have been installed in the United States, but only about 1% of these have been at Federal facilities. The majority of systems have used ice-on-coil technology, but stratified chilled water systems have also been moderately popular. Both ice-on-coil and stratified chilled water are mature technologies, but evolutionary improvements are continuously implemented by manufacturers. The experiences with cool storage at three Federal facilities are summarized below; see section on "Who is Using the Technology" for contact information.

An ice-on-coil system installed at the Ralph H. Johnson VA Medical Center in Charleston, South Carolina, was originally designed to provide the entire on-peak cooling load from storage, but subsequent building expansions now require partial chiller operation on peak cooling days. The facility was driven to consider cool storage as a means of reducing its energy costs. A $1 million rebate offered by the serving electric utility provided a huge incentive and served to ensure project cost-effectiveness. Initial problems were experienced with the chiller, but not the storage system itself. Chiller problems were probably caused by disassembly of the chiller during installation, which was required to fit the chiller into the mechanical room. These problems have since been ironed out. Other minor performance problems developed initially because no operating guidelines were in place. Standard operating procedures have now been established for each month and performance has been consistently good. Electricity cost savings are typically around $5000 per month during the cooling season at this 500,000 square foot facility.

A 10,000 ton-hour stratified chilled water tank was tied into an existing district cooling system serving 10 buildings at the Sandia National Laboratories in Albuquerque, New Mexico. Installation of the storage system allowed extension of the district cooling system to a new 150,000 square foot building without adding additional chiller capacity. In addition, annual energy savings are expected to be $200,000 per year. The system was installed and has operated without any unexpected problems. The system was designed to allow several different operating strategies, but did not require the installation of any new pumps. The biggest problem experienced was overcoming internal resistance to changes of any kind. Therefore, site personnel advise working hard to get "buy-in" from management and maintenance personnel. Also suggested is thorough consideration of alternative design options before committing to a single approach.

A full-storage, ice-on-coil system was installed at the U.S. Army Reserve Center in Monclova, Ohio, when this 54,000-square-foot facility was built in 1996. The facility received a 1998 Engineered Systems Engineering Team Award for the cool storage system and

other energy management features. Estimated energy savings for the cool storage system are about $1000 per month during the cooling season. In general, the system works well, but they have experienced a few minor problems. Occasionally, the building is occupied at night, which increases the cooling load and doesn't allow the storage system to be fully charged. Basically, the system wasn't designed to handle this type of occupancy pattern. As a result, the chillers had to be operated during the day and it takes a few days to fully recharge and return to normal operation. As site personnel point out, "If your cooling load is nearly constant, 24 hours a day, it won't work."

Evaluating Cool Storage Systems

The process of identifying and evaluating alternatives is more complicated for cooling systems using cool storage than for those without. The increased complexity is driven by the plethora of alternative storage types and system configurations plus the need to consider cooling loads and cooling system operation for a complete charge and discharge cycle rather than just a single design point. The evaluation process consists of the following steps:

- determine cooling requirements
- identify alternative storage types and system configurations to be evaluated
- conduct screening evaluation of alternatives
- refine screening evaluation results for preferred alternative(s).

Each of these steps is briefly discussed on the following pages.

For a more detailed discussion the reader is referred to the list of design and installation guides provided on page 26.

Cooling Requirements

Cool storage system evaluation and design requires knowledge of hourly cooling loads for the peak design day (for daily storage cycles or for the peak design week for weekly storage cycles) in addition to the peak design hour. Note that the peak design hour may not necessarily occur during the peak design day, but the cool storage system must be sized to meet both requirements. In addition to requiring more cooling load data than for a non-storage design, there is a greater need for that data to be accurate. For example, if the chiller in a non-storage system is undersized, the building it is serving is likely to be too warm for a few hours a day for a few days a year. However, as ambient conditions cool during the evening and early morning hours, the non-storage system will be able to catch up. Most cool storage systems have smaller chillers, however, and rely on storage to provide part or all of the cooling load during the peak afternoon hours. If a storage system is undersized, it will not be able to catch up at night and have storage adequately charged for the following day. If the storage system is undersized and there are several consecutive days of weather near peak design conditions, overheating problems will likely accumulate. In short, the smaller chiller sizes associated with storage systems provide less reserve capacity compared to non-storage systems, which puts a premium on correctly specifying the design conditions. Practical approaches for dealing with this concern include selecting more conservative design weather conditions (e.g., design for "99%" conditions rather than "97.5%" conditions) or applying a more conservative safety factor when sizing the chiller and storage components of a cool storage system. However, spending additional effort to accurately define the design cooling conditions is the best form of design insurance.

Cooling load profiles developed for generic buildings similar to the application being considered are adequate for the initial screening evaluation, but more accurate load estimation procedures are required for the revised evaluation and preparation of system design specifications. Cooling load calculations are discussed in detail in ASHRAE's Handbook on Fundamentals (ASHRAE 1997). Note that the cooling load must account for heat gains from fans, ducting, piping, and pumps, as well as the load delivered to the conditioned space. In addition, heat gain through the wall of the storage vessel and availability losses within the vessel must be accounted for when sizing storage and the chiller[4]. In retrofit situations, measurement of cooling loads at design conditions is preferred. If measurements at design conditions are not available, measurements at other conditions could be used to calibrate building load simulation models and the simulation models used to predict cooling loads at design conditions.

Identifying Alternatives

With a plethora of storage unit and system configuration possibilities, the number of alternatives to be evaluated quantitatively should be minimized by judicious, qualitative, pre-screening. With this objective in mind, the following rules-of-thumb are offered for pre-screening purposes.

Chilled water storage is more compatible with standard chilled water cooling systems than the various ice storage systems. In general, this makes chilled water storage relatively attractive for retrofits, and particularly in cooling capacity expansion situations. Chilled water systems will look their best where

[4] Mixing and/or conduction across the thermocline within a chilled water storage tank significantly increases the chilled water discharge temperature near the end of each storage cycle. Similarly, the coolant discharge temperature rises at an increasing rate in ice storage systems near the end of each discharge cycle due to ineffective heat transfer between the discharge coolant and the dwindling amount of stored ice.

relatively large storage requirements can take advantage of tank economies-of-scale and where the availability of space is not a significant concern.

The applicability of eutectic salt storage is similar to chilled water. However, its higher energy density makes it more attractive than water where limited space is a greater concern than storage cost or a slightly higher discharge temperature.

Ice storage systems are required to take advantage of cold air distribution benefits and where limited space is available. Ice storage systems minimize tank size and cost, so are generally more economical at smaller capacities where tank costs are a substantial portion of the total system cost.

Ice-harvesting and ice slurry systems separate ice generation from ice storage, resulting in lower storage-related costs than other systems. However, the ice-generators for both of these types of systems are more expensive than other systems. Thus, ice harvesting and ice slurry systems look their best in applications with a large ratio of storage capacity to storage charging capacity. This would suggest considering a weekly storage cycle as well as a daily storage cycle for these two options. Ice harvesting and ice slurry systems are also capable of providing high discharge rates.

Most ice-on-coil and encapsulated ice storage systems use standard packaged chillers and secondary coolants for charging, which minimizes ice-generating costs and ice storage system costs for most applications. Internal-melt, ice-on-coil storage and encapsulated ice storage allow partial storage without incurring an efficiency penalty during the subsequent ice-building period as happens with external-melt, ice-on-coil systems that are partially discharged. External-melt systems, like ice harvesting and ice slurry systems, offer the highest discharge rates. External-melt systems may also be directly charged with refrigerant, which offers efficiency advantages, but refrigeration equipment complexities compared to packaged chillers with secondary coolants.

The three basic configuration options are full storage and partial storage in load-leveling or demand-limiting versions. Full storage results in the greatest savings in on-peak electricity charges, but requires larger, more expensive, chillers and storage units. Thus, full storage should be considered where there are high demand charges, annually ratcheted demand charges, and/or a large differential between peak and off-peak electricity energy charges. Short discharge periods are also particularly beneficial to the economics of full storage system designs.

Equipment sizes and capital are minimized with partial storage, load-leveling designs, but on-peak electricity charges are reduced the least of the three basic configurations. Thus, situations with a high ratio of peak to average cooling loads are attractive for partial storage configurations as are situations with minimal incentive from the electric rate structure. Partial storage, demand-limiting designs are a hybrid of the two other configurations and are probably best considered as a possible variant of one of the other two principal options.

Screening Alternatives

The initial screening of alternatives follows the steps bulleted below, starting with the design load profile and applicable utility rate schedule. Note that differences in annual energy consumption generally have a smaller economic impact than differences in equipment costs and electricity demand when comparing alternatives, so is usually ignored in the screening process.

The initial screening steps are:

- size chiller and storage
- estimate chiller and storage capital cost
- estimate annual demand savings
- calculate system life-cycle cost
- select preferred system(s) for detailed analysis.

For non-storage systems, the chiller is sized to meet the peak hourly load. With storage, the chiller is sized to meet the cooling load over the storage cycle, typically a 24-hour period. Thus, for partial-storage systems, the chiller will always be smaller than for a non-storage system, while for full-storage systems, the chiller may be smaller or larger than for a non-storage system, depending on the design load profile and the length of the on-peak period.

At the simplest level, chiller capacity equals the design-day cooling load divided by the number of chiller operating hours. For a partial-storage system, the number of chiller operating hours is 24, i.e., the chiller operates at full capacity for 24 hours on the design day. For a full-storage system, the number of chiller operating hours is 24 minus the length of the peak-demand period.

For greater accuracy the calculation of nominal chiller capacity should consider the relative chiller capacity when charging storage, direct cooling during the on-peak period, and direct cooling during the off-peak period. Capacity may be different than the nominal rating due to differences in evaporating or condensing conditions and/or because of different assumptions regarding selection of full storage or partial storage (with load-leveling or demand-limiting options) designs. Thus, the nominal chiller capacity equals the design-day cooling load divided by the sum of the number of chiller operating hours in each mode, with the number of hours in each mode multiplied by the average capacity in that mode relative to the nominal capacity (see Equations 9 and 10).

(9) Nominal Chiller Capacity = Total Cooling Load / Adjusted Chiller Operating Hours

(10) Adjusted Chiller Operating Hours = $H_1CR_1 + H_2CR_2 + H_3CR_3$

Where H_1 = hours charging storage

CR_1 = capacity relative to nominal conditions while charging

H_2 = hours direct cooling during on-peak period

CR_2 = capacity relative to nominal conditions while cooling during on-peak period

H_3 = hours direct cooling during off-peak period

CR_3 = capacity relative to nominal conditions while cooling during off-peak period

Note that if the nominal chiller capacity calculated via Equations 9 and 10 is greater than the load for any hour during the direct cooling mode, then the chiller capacity must be recalculated via an iterative procedure illustrated in the *Design Guide for Cool Thermal Storage* (ASHRAE 1993).

The required storage capacity is equal to the total cooling load minus any load provided directly by the chiller or from storage while storage is being charged. Similar to the calculation of nominal chiller capacity, cooling provided directly by the chiller or from storage while storage is being charged must consider the variation in chiller capacity while operating in these different modes, as shown in Equations 11 and 12.

(11) Nominal Storage Capacity = Total Cooling Load - Directly Served Load

(12) Directly Served Load = $NCC*(H_2CR_2 + H_3CR_3) + CAPCH$

Where CAPCH = capacity provided from storage while simultaneously charging storage and NCC = the nominal chiller capacity.

Note that in some cases the actual load met from direct cooling will be less than $NCC*H_2CR_2$ or $NCC*H_3CR_3$ if the demand for direct cooling is less than the chiller's capacity. In this case, the actual capacity provided must be used. In short, care must be taken to keep track of the cooling loads and expected provision of cooling from the chiller and/or storage on an hourly basis. Also note that equations 11 and 12 calculate the nominal storage capacity, suitable for a screening analysis. The actual required storage capacity must be determined via an hour-by-hour simulation of performance that captures the interactions of the chiller, storage, and the load. In particular, all storage systems suffer from an increasing rise in discharge temperature near the end of a discharge cycle that effectively reduces the useful capacity from its theoretical maximum.

Sample Calculations

Chiller and storage sizing for a screening evaluation is illustrated through the following example. The example is based on a partial storage, load-leveling system design with ice storage. Compared to its rated capacity at standard ARI conditions, the relative chiller capacity is presumed to be 0.8 in the storage charging mode and 0.9 in the direct cooling mode. Design cooling day cooling loads, chiller operation, and storage operation are presented in Table 1 and Figure 16. The cooling load builds in the late morning, peaks in mid-afternoon and decays to its minimum daily value in the early morning. The utility on-peak period is shown as running from noon until 6:00 p.m., but this has no impact on a partial storage, load-leveling design.

The total daily load is 48,500 ton-hours. Thus, if the chillers were able to provide their nominal capacity while charging storage and direct cooling, the required capacity would be 2021 tons (48,500 ton-hours/24 hours = 2021 tons). This is the average actual capacity the chillers will need to provide to meet the daily cooling demand. The required nominal capacity will be higher because the chiller operates at less than nominal capacity. In order to achieve an average net capacity of 2021 tons the average net capacity while charging (where the relative capacity is 0.8) will be less than 2021 while the average net capacity while direct cooling (where the relative capacity is 0.9) will be more than 2021. These approximations of net capacity allow for reasonable assumptions regarding the chiller and storage operating modes during each hour of the day that will be verified or refuted after determining the nominal chiller capacity. For example, with a direct cooling capacity of at least 2021 tons, the chillers are assumed to be charging storage during hours 1-9 and 21-24 and directly cooling for hours 10-20. The cooling load is met by discharging storage alone during hours 1-9 and 21-24, while storage discharge and direct cooling are required to meet the load for hours 10-20.

The nominal chiller capacity is calculated by plugging the assumptions presented above into Equations 9 and 10.

Nominal Chiller Capacity = 48,500/((13*0.8)+(6*0.9)+(5*0.9) = 2389.2 tons[5]

The actual chiller capacity is 1911.3 tons (2389.2 * 0.8) in the storage charging mode and 2150.2 tons (2389.2 * 0.9) in the direct cooling mode. 2150.2 is less than the cooling load for all hours presumed to be in the direct cooling mode and 1911.3 is greater than the cooling load for all hours where storage is being charged and discharged. Thus, no further adjustments of the initial assumptions are necessary.

The nominal storage capacity is calculated by plugging the assumptions presented above into Equations 11 and 12.

Nominal Storage Capacity = 48,500 - {2389.2*[(6*0.9)+(5*0.9)]+17,200} = 7,647 ton-hours

The chiller and storage capacity calculations are confirmed by the figures shown in Table 1, which illustrate the charging and discharging of storage from no stored energy in hour 20 to a maximum of 7,647 ton-hours in hour 9.

[5] The capacity and cost figures used in this section have not been rounded off so that the reader can more easily duplicate the calculations.

***Table 1**. Chiller and Storage Sizing Example*

Hour	Utility Period	Load, Ton-Hours	Chiller Mode	Storage Mode	Load From Chiller, Ton-Hours	Load From Storage, Ton-Hours	Charge to Storage, Ton-Hours	Storage Balance, Ton-Hours
1	off-peak	1200	CH	CH/DCH	0	1200	1911	1,957
2	off-peak	1100	CH	CH/DCH	0	1100	1911	2,768
3	off-peak	1000	CH	CH/DCH	0	1000	1911	3,679
4	off-peak	900	CH	CH/DCH	0	900	1911	4,691
5	off-peak	800	CH	CH/D CH	0	800	1911	5,802
6	off-peak	1000	CH	CH/DCH	0	1000	1911	6,713
7	off-peak	1300	CH	CH/DCH	0	1300	1911	7,325
8	off-peak	1600	CH	CH/DCH	0	1600	1911	7,636
9	off-peak	1900	CH	CH/DCH	0	1900	1911	7,647
10	off-peak	2200	DC	DCH	2150	50	0	7,598
11	off-peak	2500	DC	DCH	2150	350	0	7,248
12	off-peak	2800	DC	DCH	2150	650	0	6,598
13	on-peak	3100	DC	DCH	2150	950	0	5,648
14	on-peak	3300	DC	DCH	2150	1150	0	4,499
15	on-peak	3500	DC	DCH	2150	1350	0	3,149
16	on-peak	3300	DC	DCH	2150	1150	0	1,999
17	on-peak	3100	DC	DCH	2150	950	0	1,049
18	on-peak	2800	DC	DCH	2150	650	0	400
19	off-peak	2500	DC	DCH	2150	350	0	50
20	off-peak	2200	DC	DCH	2150	50	0	0
21	off-peak	1900	CH	CH/DCH	0	1900	1911	11
22	off-peak	1700	CH	CH/DCH	0	1700	1911	223
23	off-peak	1500	CH	CH/DCH	0	1500	1911	634
24	off-peak	1300	CH	CH/DCH	0	1300	1911	1,245
Totals		**48,500**			**23,653**	**24,847**		

CH = Charging
DCH = Discharging
DC = Direct Cooling

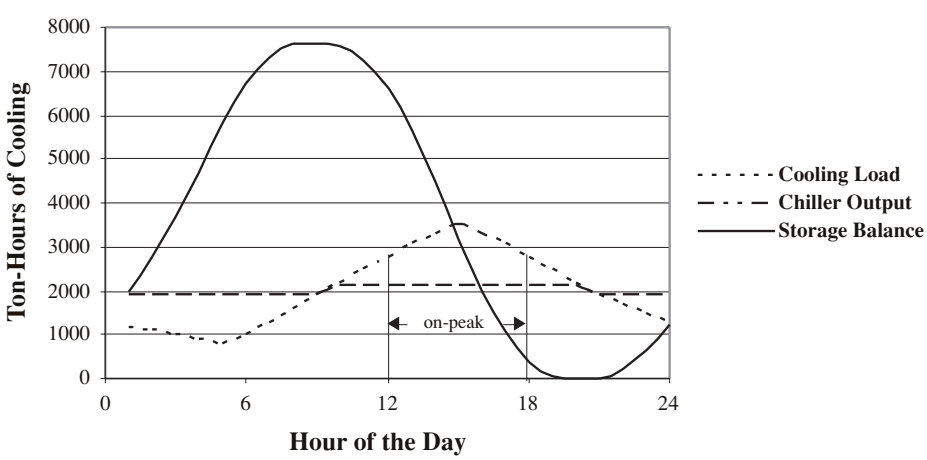

***Figure 16**. Chiller and storage sizing example.*

The nominal chiller capacity (2389 tons) required for the storage system would probably be served by two 1195-ton units, with each unit costing $424,565 based on Equation 2. Assuming ice-on-coil storage (at $70/ton-hour; see prior section on costs), the cost of the storage unit would be $535,290. Thus, the total storage system cost would be $1,384,420. A water chiller for a conventional system would need to have an actual capacity of 3500 tons or a nominal capacity of 3888.9 tons (3500/0.9) to provide 3500 tons during the on-peak period. A total capacity of 3888.9 tons would probably

require three 1296.3-ton units, with each unit costing $455,663 according to Equation 2 for a total conventional chiller cost of $1,366,989. Thus, the initial capital cost of the storage system would be $17,431 more expensive than the conventional system. Differences in cooling tower costs should also be considered when refining the initial screening results.

The screening evaluation must also estimate the reduction in electricity costs associated with the cool storage system. Electricity costs can be reduced from a reduction in demand charges and/or energy charges. The importance of evaluating one or the other or both depends on the site-specific electric rate structure.

The evaluation of demand charge savings starts by estimating the reduction in on-peak demand when comparing conventional and storage cooling systems. In the example, the peak cooling demand of 3500 tons would create a peak cooling system electric demand of 3076 kW for a water chilling system [including the electrical demand of the chiller compressor, cooling water pumps and cooling tower fan (if water-cooled) or condenser fan (if air-cooled)] with a COP of 4.0. The cool storage system chillers need only provide 2150 tons of cooling during the on-peak period, so the electrical demand of its water chilling system components would be 1890 kW at a COP of 4.0 or a reduction of 1186 kW.[6] Note that the peak electrical demand for the chilled water pumps will be approximately the same for the two systems and any difference can be ignored for the screening study. Differences in supply and return water temperatures, flow rates, and pumping energy should be considered when refining the analysis for alternatives passing the initial screening.

For a typical monthly demand charge of $10/kW, the 1186 kW demand reduction translates into savings of $11,860 for the peak month. Calculation of demand savings in other months requires additional assumptions or knowledge of the variation in peak cooling loads from month to month, the type of demand charge, and whether the partial storage system is operated in chiller priority or storage priority mode. By definition, the peak cooling loads will be less during the other 11 months of the year. In addition, the on-peak period often changes and demand charges are often lower in the winter than in the summer. In short, the annual demand charge savings will usually be considerably less than 12 times the peak monthly savings. Lacking any better information, assuming that annual demand savings are equivalent to 8 months like the peak demand month for partial storage systems and 6.5 months for full storage systems is reasonable (ASHRAE 1993). Thus, annual demand charge savings would be estimated at $94,880 ($11, 860 * 8) for the example cooling system.

Clearly, these rules-of-thumb for estimating the annual demand charge savings should only be applied for initial screening purposes and not for the more refined analyses that follow. Even for the initial screening, additional analysis of cooling loads is required where the differential between on-peak and off-peak energy charges is thought to be significant. At a minimum, the annual cooling load must be segregated into that occurring during peak and off-peak periods for each alternative cooling system. System COPs should be estimated for both periods to determine kWh consumption and the applicable energy charge applied to estimate energy costs and the savings relative to the reference non-storage system. For selecting the best system configuration and operating strategy from similar options or finalizing component sizing and system design specifications, an evaluation based on hourly cooling loads for the full length of the cooling season is a requisite.

The results of the screening evaluation should determine which, if any, of the cool storage system alternatives is worthy of further investigation. Unless the least costly system also incurs the lowest electricity costs, the life-cycle cost of each alternative should be calculated to develop a ranking. Although the absolute accuracy of the screening results is relatively poor, the relative accuracy for comparative purposes is generally adequate thanks to the use of common ground rules and assumptions. Still, judgment must be applied regarding what constitutes a significant difference and how many alternatives should be carried forward.

Refining the Evaluation

A more detailed evaluation is required to select the best system from those retained from the screening evaluation and to prepare the final system design. The most important refinement may be to develop better estimates of cooling loads and ambient air conditions while operating the prospective cooling systems. The quality of the evaluation and resulting design can be no better than the quality of the underlying cooling load and weather data.

Typical building load profiles, while adequate for the screening evaluation, are not adequate for selecting the best system and preparing its design. Hourly cooling load data allow much greater accuracy, but may be difficult to obtain. Metered chilled water production or chiller power input may be available in some cases. Alternatively, building energy simulation models could be used to estimate hourly cooling loads.

[6] The peak electric demand for the cooling system usually coincides with the peak electric demand for the entire facility, but this is not necessarily true. More generally, the peak electric demand for the alternative cooling systems should be compared for the hour creating the peak billing demand.

Another option would be to repeat calculations used to determine hourly loads for the peak annual demand day for the peak demand days in each of the other 11 months. This will allow a more accurate assessment of demand charge reduction (remember that its not necessarily the peak cooling system demand that's important, but the cooling system demand coincident with peak demand at the utility metering point). Barring the availability of metered or simulated hourly load data, reasonable assumptions will need to be made to estimate monthly cooling loads and the portions occurring during on-peak and off-peak periods. Accurate knowledge of hourly loads is required where the difference between on-peak and off-peak electricity energy charges is important to the economic justification of the cool storage system.

The refined analysis needs to specifically consider how the cool storage system will be integrated and operated with the rest of the cooling system and the impact of integration details on performance. Operation and control schemes (e.g., chiller priority or storage priority) must be selected. Flow diagrams identifying the requisite piping, pumps, valves, and heat exchangers must developed. System performance should be simulated for the design day at a minimum or for entire year if possible. The simulation should evaluate supply and return fluid temperatures while charging and discharging, supply air temperature to the conditioned space, and energy inputs to the cooling system. Special attention should be paid to the rise in storage discharge and supply air temperatures as storage is discharged to ensure the cooling load can be comfortably met. The actual storage capacity required will be greater than the theoretical storage capacity by a margin that varies depending on the storage technology and discharge rate required when the storage system is nearly discharged.

Vendor quotes should be obtained for major equipment components if not already done for the initial screening evaluation. The costs of all ancillary equipment (e.g., pumps, piping, valves, heat exchangers) need to be estimated and included in the economic evaluation. Maintenance cost differences should also be evaluated and incorporated into the analysis.

Case Study

An internal-melt ice-on-coil thermal energy storage system was installed at a GSA office building in Pittsburgh, Pennsylvania, as part of a project upgrading the entire chilled water cooling system. Originally driven by the need to replace CFC refrigerants, the project eventually evolved to include replacement of the chillers and cooling tower and installation of the cool storage system and variable speed drives on the chilled water and condenser water pumps. The system was installed during the winter of 1995-1996 and has been operating successfully since.

Facility Description

The William S. Moorhead Federal Building is a 23-story, 788,000 square foot structure constructed in 1963. Various Federal agencies occupy the building that is managed by the GSA. Occupancy is concentrated on weekdays from 8:00 a.m. till 5:00 p.m. with occasional usage during other hours.

Existing Technology Description

The existing cooling system consisted of two 990-ton centrifugal chillers with an efficiency of about 0.90 kW/ton. Both chillers used CFC-12 refrigerant and had a history of leaking. Two constant-speed 125 hp chilled water pumps provided 2866 gpm at 125 feet of head. The 75 hp condenser pumps provided 2487 gpm at 80 feet of head. Heat rejection was served by a single 1980 ton roof-mounted cooling tower.

New Technology Equipment Selection

Initial investigations examined the feasibility of retrofitting the existing chillers with a non-CFC refrigerant and installing variable speed drives (VSDs). While it was possible to simply change the refrigerant and installing the VSDs would improve efficiency, replacement with new, high-efficiency non-CFC chillers was more cost-effective. At this point in the project development process, Duquesne Light Company, the serving utility, encouraged the GSA to consider a cool storage system. By using cool storage, the cooling capacity of the replacement chillers was reduced by nearly 40%, to two 600-ton units. The new chillers have a full load efficiency of 0.60 kW/ton at standard rating conditions and 0.75 kW/ton when operating in the ice-making mode. Constraints on physical space dictated an ice storage system rather than chilled water; the ice storage units were installed in a basement space previously used for storage and shops. Thirty-nine modular ice storage units were installed with a total capacity of 7410 ton-hours.

Savings Potential

Installation of the cool storage system reduced the size and cost of the new chillers and also resulted in reduced demand charges by minimizing chiller operation during the peak demand period. During a typical summer weekday, the ice storage system is charged from 6:00 p.m. until 6:00 a.m. the following morning. Storage is discharged from noon until 4:00 p.m., the utility's peak demand period, to minimize on-peak chiller operation in this partial storage type system. The chillers are operated as needed during the other hours of the day to directly meet the building cooling load. On relatively mild summer days and when cooling during late spring and early fall months, the chillers don't need to be run during the peak demand period at all. The lower chilled water delivery temperature possible with an ice storage system also makes it possible to consider the benefits of cold-air distribution in an anticipated future replacement of the building's airside systems.

Life-Cycle Cost

The project cost $1.6 million, which included removal and replacement of existing chillers and cooling towers, the cool storage system, plus pumps, heat exchangers, and other miscellaneous minor equipment. Monthly savings were estimated to range from $60,000 to $80,000 in the feasibility study, which was based on a simulation of building loads and equipment performance. Actual total energy use has been higher than expected, but building use and cooling loads have also increased from that assumed in the feasibility study, so the savings estimate may still be valid. Life-cycle cost savings were calculated to be $10,447,177 using QuickBLCC. The results of the QuickBLCC calculation are presented in detail in Appendix B. BLCC, the Building Life-Cycle Cost Software developed by NIST, is described in Appendix A.

Implementation and Post-Implementation Experience

The major components of the new cooling plant (chillers, cooling tower, and ice storage units) were installed first, followed by piping, pump, and control revisions. A new electronic control system replaced the old pneumatic system to enhance energy savings and improve zone comfort. After installation, the new system was subject to a commissioning procedure by the GSA. According to Jerry Bower, Maintenance and Operations Foreman, the system has generally worked well. They have been able to keep the building just as cool as the old system, despite having downsized the chillers by 40%. During peak cooling periods, the two chillers operate while the storage system discharges. "The system acts like three 600-ton units," says Jerry. They have experienced a few minor problems. The first control system was not Y2K compliant, so had to be upgraded. Other component upgrades (e.g., valves, pumps) have also been implemented over time. "These things should have been done up front, but we didn't have enough money," said Jerry. Jerry would also like to have more storage capacity, but they were short on space as well as money. In summary, Jerry notes, "We were all skeptical at first, but it's been proven and is working fine."

The Technology in Perspective

Cool storage technologies of one type or another have been successfully applied in several thousand locations to reduce energy costs, reduce chiller capacity and cost, and save energy. Relatively few of these applications have been in the Federal sector, however. This is unfortunate, because Federal facilities tend to have several characteristics that should make cool storage generally more attractive than in other sectors. These characteristics include:

- Relatively large cooling systems that can take advantage of storage system economies-of-scale.
- A preponderance of chilled water cooling systems that are generally easier to integrate with cool storage than cooling systems served by direct-expansion equipment.
- Rate structures characterized by high demand charges and/or large variation in hourly energy charges.
- Older equipment that needs replacement.

On the other hand, Federal facilities often suffer from the following conditions that tend to make cool storage less attractive:

- Lack of operation and maintenance experience with refrigeration equipment used in some cool storage systems.
- Lack of training on operating and control strategies for minimizing cooling system life-cycle costs.
- Limited resources for engineering feasibility studies and system design.

Recognition of these constraints suggests that Federal energy managers may need to lean toward selection of relatively simple cool storage systems that are easier to design and operate, but should ensure that facility staff are properly trained on the operation and maintenance of cool storage systems.

The Technology's Development

Cool storage is not a new concept; in fact, its first use came in the 1940s shortly after the development of vapor compression cooling systems (Knebel 1995; Hasnain 1998). Early usage was focused on applications with exceptionally high ratios of peak to average cooling demand, such as in theaters, churches, arenas, and dairies. Ice-on-coil storage systems were often used with the principal motivation being to reduce chiller size. As cooling systems spread to other building space cooling applications in the 60s and 70s, cool storage was not often used, resulting in significant electric load growth concentrated during the daytime hours of summer. The subsequent low utilization of power generating and delivery assets caused utilities to offer various incentives promoting cool storage as well as other demand management technologies. The result was a second wave of cool storage development and use. The development of effective water stratification technologies made chilled water storage more popular. Ice-on-coil technology improved through the development of non-metal coils and "packaged" systems. Eutectic salt and encapsulated ice storage systems were developed to provide latent heat storage alternatives to ice-on-coil and ice-harvesting technologies. More recent developments include ice slurry generators and chilled water systems employing additives to decrease the minimum storage temperature in chilled water storage systems.

Technology Outlook

Cool storage technology is approximately 50 years old, but innovations

continue as indicated by the recent developments described above. Product innovation is driven by a competitive market (see manufacturers list) and changing economic conditions. Deregulation of the electric utility industry has reduced or eliminated many demand side management programs. As a result, utility incentives for cool storage are not as common or generous as they were in the past. On the other hand, deregulation seems likely to spur electricity pricing structures (e.g., real-time pricing) that will enhance the need for load-control technologies such as cool storage. On net, the financial benefits of shifting load to off-peak hours are still very important, but greater emphasis is being placed on system designs that reduce chiller size and cost and/or improve building system efficiency.

Manufacturers

Cool storage system manufacturers were identified by combining lists from product directories published by Thomas Register, Energy Products, Heating/Piping/Air-Conditioning, Energy User News, Consulting-Specifying Engineer, International Thermal Storage Advisory Council, E-Source, and the International District Energy Association. We also conducted searches of Internet web sites and library databases. Each manufacturer was contacted to determine the type of cool storage equipment offered and its characteristics.

Despite our efforts, it is practically impossible to ensure that all manufacturers of cool storage equipment have been identified. To those, we extend our apologies. This list is provided as a service for those interested in obtaining information on specific cool storage products. No endorsement or other judgment regarding qualification of any manufacturer listed is given or implied.

Applied Thermal Technologies
Hydro-Miser Division
906-B Boardwalk
San Marcos, CA 92069
Phone: 760-744-5031
Fax: 760-744-5031
Principal TES Product: chiller integrated with external-melt, ice-on-coil storage

Baltimore Aircoil Company
7595 Montivides Road
Jessup, MD 20794
Phone: 410-799-6200
Fax: 410-799-6416
Principal TES Products: chiller integrated with internal-melt, ice-on-coil storage for rooftop HVAC retrofit; external-melt, ice-on-coil storage; ice-on-coil tube bundles

Berg Chilling Systems, Inc.
51 Nantucket Blvd.
Toronto, ON, Canada M1P 2N5
Contact: Walter Langille
Phone: 416-755-2221
Fax: 416-755-3874
www.berg-group.com
Principal TES Product: chiller integrated with ice harvester

Caldwell Energy and Environmental, Inc.
4000 Tower Road
Louisville, KY 40219
Contact: Drew Wozniak
Phone: 502-964-6450
Fax: 502-966-8732
Principal TES Products: chiller integrated with ice harvester; chilled water or ice/water storage tanks; external-melt, ice-on-coil storage

Calmac Manufacturing Corporation
101 West Sheffield Ave.
P.O. Box 710
Englewood, NJ 07631-0710
Contact: Roy Nathan
Phone: 201-569-0420
Fax: 201-569-7593
www.calmac.com
Principal TES Products: internal-melt, ice-on-coil storage; internal-melt, ice-on-coil storage for rooftop HVAC retrofit

Chester-Jensen Company, Inc.
P.O. Box 908
Chester, PA 19016
Contact: Steve Miller
Phone: 610-876-6276
Fax: 610-876-0485
Principal TES Product: external-melt, ice-on-coil storage

Chicago Bridge and Iron Company
601 W. 143rd Street, P.O. Box 9
Plainfield, IL 60544-0009
Contact: Rich Horn
Phone: 815439-3100
Fax: 815-439-3130
www.chicago-bridge.com
Principal TES Product: chilled water storage tank

Cristopia Energy Systems
165 Via Catarina
San Dimas,CA 91773
Contact: Moudood A. Aslam
Phone: 909-305-0463
Fax: 909-305-0463
Principal TES Product: eutectic salt latent heat storage systems

Cryogel
P.O. Box 910525
San Diego, CA 92191
Contact: Bruce McDavid
Phone: 619-792-9003
Fax: 619-792-2743
Principal TES Product: encapsulated water/ice storage balls

Dunham-Bush
101 Burgess Road
Harrisonburg, VA 22801
Contact: Nathan Hathaway
Phone: 540-434-0711
Fax: 540-434-4595
www.dunham-bush.com
Principal TES Product: chiller integrated with internal-melt, ice-on-coil storage

Evapco, Inc.
P.O. Box 1300
Westminster, MD 21158-0399
Contact: Craig Goralski
Phone: 410-756-2600
Fax: 410-756-6450
Principal TES Product: external-melt ice-on-coil storage

FAFCO, Inc.
2690 Middlefield Road
Redwood City, CA 94063-3455
Contact: Tyler Bradshaw
Phone: 650-363-2752
Fax: 650-363-8423
www.fafco.com
Principal TES Product: internal-melt, ice-on-coil storage

Girton Manufacturing Company, Inc.
P.O Box 900 TR
Millville, PA 17846-0900
Contact: Rich Puterbaugh
Phone: 570-458-5521
Fax: 570-458-5589
Principal TES Product: chiller integrated with external-melt, ice-on-coil storage; external-melt, ice-on-coil storage

Integrated Ice Systems Inc.
Woodinville, WA
Contact: R.A. Roland
Phone: 425-488-1877
Principal TES Product: chiller integrated with internal-melt, ice-on-coil storage

Matrix Service, Inc.
San Luis Tank Division
825 26th Street, P.O. Box 245
Paso Robles, CA 93447-0245
Contact: Lorin Todd
Phone: 805-238-0888
Fax: 805-238-2724
Principal TES Product: chilled water storage tank

Morris and Associates
P.O. Box 1046
Raleigh, NC 27602
Contact: Dan Caswell
Phone: 919-779-1250
Fax: 919-779-3466
Principal TES Product: chiller integrated with ice harvester

Paul Mueller Company
1600 W. Phelps, P.O. Box 828
Springfield, MO 65801-0828
Contact: Duke Gault
Phone: 417-831-3000
Fax: 417-862-9008
www.muel.com
Principal TES Product: ice slurry generator

Natgun Corporation
Contact: Chris Hodgson
Phone: 800-662-8486
Principal TES Product: chilled water storage tank

North Star Ice Equipment Corporation
P.O. Box 80227
Seattle, WA 98108-0227
Phone: 800-959-0875
Fax: 206-763-7323
Principal TES Product: chiller integrated with ice harvester

Pitt-DesMoines, Inc.
3400 Grand Ave.
Pittsburgh, PA 15225
Contact: Gary Wildman
Phone: 412-331-3000
Fax: 412-331-3188
Principal TES Product: chilled water storage tank

Preload, Inc.
5710 LBJ Freeway, Suite 140
Dallas, TX 75240
Contact: Bill Devitt
Phone: 972-385-0550
Fax: 972-385-0557
www.preload.com
Principal TES Product: chilled water storage tank

Powell Energy Products, Inc.
3041 Home Road, P.O Box 203
Powell, OH 43065-0203
Contact: Michael McRell
Phone: 614-881-5596
Fax: 614-881-5989
Principal TES Product: internal-melt, ice-on-coil storage for rooftop HVAC retrofit

Sunwell Technologies, Inc.
180 Caster Ave.
Woodbridge, ON, Canada L4L 5Y7
Contact: Jamie-Lee Wilson
Phone: 905-856-0400
Fax: 905-856-1935
www.sunwell.com
Principal TES Product: ice slurry generator

Tampa Tank, Inc.
5205 Adamo Drive
Tampa, FL 33619
Contact: Jim Daniels
Phone: 813-623-2675
Fax: 813-626-1641
www.tampatank.com
Principal TES Product: chilled water storage tank

Thermal Technologies, Inc.
1827 Wehrli Road, Suite 105
Naperville, IL 60565
Contact: John Andrepont
Phone: 630-357-2666
Fax: 630-527-2349
Principal TES Product: chilled water storage tank with chemical additives to allow lower temperature storage

Trane Company
3600 Pammel Creek Road
La Crosse, WI 54601
Phone: 608-787-2000
www.trane.com
Principal TES Product: internal-melt, ice-on-coil storage

Waffle-Crete International, Inc.
2500 East 9th Street Road, P.O. Box 1008
Hays, KS 67601
Contact: Linda McLain
Phone: 785-625-3486
Fax: 785-625-8542
www.waffle-crete.com
Principal TES Product: chilled water storage tank

Who is Using the Technology

Thousands of cool storage systems have been installed in the United States. A survey conducted for ASHRAE resulted in an estimated population of 1500–2000 systems in the early 1990s (Potter 1994). The vast majority of these systems have been installed in non-Federal facilities. Applications cover a wide range of facility types, but most commonly are offices, schools, retail stores, places of worship, refrigerated food storage facilities, and hospitals.

Between 80% and 85% of the systems installed use one of the several kinds of ice storage. Another 10–15% use chilled water storage, with eutectic salt systems representing about 5% of the systems in the survey conducted by Potter (1994). Based on data collected from cool storage equipment manufacturers for this FTA, only about 1% of the systems have been installed at Federal facilities. Selected Federal sites using cool storage systems are identified below.

Moorhead Federal Building
1000 Liberty Avenue
Pittsburgh, PA 15222
Jerry Bower, Maintenance and Operations Foreman
412-395-5436

Ralph H. Johnson VA Medical Center
Charleston, SC
Jim Brennen, Energy Manager
843-577-5011 ext. 7229

Dallas VA Medical Center
4500 S. Lancaster Road
Dallas, TX 75216
Larry Stevenson, Energy Manager
214-372-7020

Brookhaven National Laboratory
Building 134 C
Upton, NY 11973
Mark Toscana, Energy Manager
516-344-2599

Sandia National Laboratories
Albuquerque, NM
Gerald Savage, Construction Management Engineer
505-844-9403

U.S. Army Reserve Center
9825 Garden Road
Monclova, OH 43542
Gary Smith, Facility Manager
419-868-3921 ext. 109

For Further Information

Associations

Air Conditioning and Refrigeration Institute
4301 North Fairfax Drive, Suite 425
Arlington, VA 22203
Phone: 703-524-8800
Fax: 703-528-3816
www.ari.org

American Society of Heating, Refrigeration, and Air Conditioning Engineers
1791 Tullie Circle
Atlanta, GA 30329
Phone: 404-636-8400
Fax: 404-321-5478
www.ashrae.org

Electric Power Research Institute
3412 Hillview Avenue, P.O. Box 10412
Palo Alto, CA 94303
Phone: (650) 855-2000
Fax: (650) 855-2263
www.epri.com

HVAC&R Center
150 East Gilman Street, Suite 2200
Madison, WI 53703
Phone: 800-858-3774
Fax: 608-262-6209
www.engr.wisc.edu/centers/tsarc/tsarc.html

International District Energy Association
1200 19th Street, N.W. Suite 300
Washington, D.C. 20036-2412
Phone 202-429-5111
Fax: 202-429-5113
www.energy.rochester.edu/idea/

Design and Installation Guides

Design Guide for Cool Thermal Storage
American Society of Heating, Refrigeration, and Air Conditioning Engineers
1791 Tullie Circle
Atlanta, Georgia 30329

Study of Operational Experience with Thermal Storage Systems
American Society of Heating, Refrigeration, and Air Conditioning Engineers
1791 Tullie Circle
Atlanta, Georgia 30329

Successful Cool Storage Projects: From Planning to Operation
American Society of Heating, Refrigeration, and Air Conditioning Engineers
1791 Tullie Circle
Atlanta, Georgia 30329

Source Energy and Environmental Impacts of Thermal Energy Storage
California Energy Commission
1516 Ninth Street
Sacramento, CA 95814-5504

Commercial Space Cooling and Air Handling Technology Atlas Cool Thermal Storage Chapter
E SOURCE, Inc.
4755 Walnut Street
Boulder, Colorado 80301-2537

References

Ahlgren, R.M. 1987. *Water Treatment Technologies for Thermal Storage Systems*. EPRI EM-5545. Electric Power Research Institute. Palo Alto, California.

ASHRAE. 1997. *ASHRAE Handbook – Fundamentals* . American Society of Heating, Refrigeration, and Air Conditioning Engineers. Atlanta, Georgia.

ASHRAE. 1993. *Design Guide for Cool Thermal Storage*. American Society of Heating, Refrigeration, and Air Conditioning Engineers. Atlanta, Georgia.

Bahnfleth, W.P. and W.S. Joyce. 1995. "Stratified Storage Economically Increases Capacity and Efficiency of Campus Chilled Water System." *ASHRAE Journal* (March, 1995).

Caldwell, J.S. and W.P. Bahnbleth. 1997. "Chilled Water Thermal Energy Storage without Electric Rate Incentives or Rebates." *Journal of Architectural Engineering* (September, 1997).

Cahners Business Information. 1999. *Energy User News*. Vol. 24, No. 5.

Cahners Business Information. 1999b. *Energy User News*. Vol. 24, No. 8.

Duffy, G. 1992. "Thermal Storage Emphasis Shifts to Saving Energy." *Engineered Systems* (July / August, 1992).

Electric Power Research Institute. 1992. *Water-Thermal Energy Storage Fact Sheet*. Palo Alto, California.

E Source, Inc. 1998. *Commercial Space Cooling and Air Handling Technology Atlas*; *Cool Thermal Storage Chapter*. Boulder, Colorado.

Hasnain, S.M. 1998. "Review on Sustainable Thermal Energy Storage Technologies, Part II: Cool Thermal Storage. *Energy Conversion Management*. Vol. 39, No. 11.

Knebel, D.E. 1995. "Current Trends in Thermal Storage." *Engineered Systems* (January, 1995).

MacCracken, C.D. 1993. "Off-peak air conditioning: A major energy saver." *ASHRAE Journal* (May 1993).

MacCracken, C.D. 1994. "Cold Air Systems: Sleeping Giant." *Heating/Piping/Air Conditioning* (April 1994).

Means, R.S. Company. 1999. *Mechanical Cost Data 1999*. Kingston, Massachusetts.

Potter, R.A. 1994. *Study of the Operational Experience with Thermal Storage Systems*. ASHRAE Research Project 766. American Society of Heating, Refrigeration, and Air Conditioning Engineers. Atlanta, Georgia.

Sohn, C.W. and G.L. Cler. 1990. "Assessment of Market Potential in Storage Cooling Systems for Army Facilities." *ASHRAE Transactions*, Vol. 96, Part 1.

Strutz, M.J. 1995. "Chilled water storage: It's more than just shedding peaks." *Proceedings, 86th Annual Conference of the International District Energy Association*. Washington, D.C.

Appendixes

Appendix A: Federal Life-Cycle Costing Procedures and the BLCC Software

Appendix B: QuickBLCC Results for Case Study

Appendix A

Federal Life-Cycle Costing Procedures and the BLCC Software

Federal agencies are required to evaluate energy-related investments on the basis of minimum life-cycle costs (10 CFR Part 436). A life-cycle cost evaluation computes the total long-run costs of a number of potential actions, and selects the action that minimizes the long-run costs. When considering retrofits, sticking with the existing equipment is one potential action, often called the *baseline* condition. The life-cycle cost (LCC) of a potential investment is the present value of all of the costs associated with the investment over time.

The first step in calculating the LCC is the identification of the costs. *Installed Cost* includes cost of materials purchased and the labor required to install them (for example, the price of an energy-efficient lighting fixture, plus cost of labor to install it). *Energy Cost* includes annual expenditures on energy to operate equipment. (For example, a lighting fixture that draws 100 watts and operates 2,000 hours annually requires 200,000 watt-hours (200 kWh) annually. At an electricity price of $0.10 per kWh, this fixture has an annual energy cost of $20.) *Nonfuel Operations and Maintenance* includes annual expenditures on parts and activities required to operate equipment (for example, replacing burned out light bulbs). *Replacement Costs* include expenditures to replace equipment upon failure (for example, replacing an oil furnace when it is no longer usable).

Because LCC includes the cost of money, periodic and aperiodic maintenance (O&M) and equipment replacement costs, energy escalation rates, and salvage value, it is usually expressed as a present value, which is evaluated by

$$LCC = PV(IC) + PV(EC) + PV(OM) + PV(REP)$$

where PV(x) denotes "present value of cost stream x,"
IC is the installed cost,
EC is the annual energy cost,
OM is the annual nonenergy O&M cost, and
REP is the future replacement cost.

Net present value (NPV) is the difference between the LCCs of two investment alternatives, e.g., the LCC of an energy-saving or energy-cost-reducing alternative and the LCC of the existing, or baseline, equipment. If the alternative's LCC is less than the baseline's LCC, the alternative is said to have a positive NPV, i.e., it is cost-effective. NPV is thus given by

$$NPV = PV(EC_0) - PV(EC_1)) + PV(OM_0) - PV(OM_1)) + PV(REP_0) - PV(REP_1)) - PV(IC)$$

or

$$NPV = PV(ECS) + PV(OMS) + PV(REPS) - PV(IC)$$

where subscript 0 denotes the existing or baseline condition,
subscript 1 denotes the energy cost saving measure,
IC is the installation cost of the alternative (note that the IC of the baseline is assumed zero),
ECS is the annual energy cost savings,
OMS is the annual nonenergy O&M savings, and
REPS is the future replacement savings.

Levelized energy cost (LEC) is the break-even energy price (blended) at which a conservation, efficiency, renewable, or fuel-switching measure becomes cost-effective (NPV >= 0). Thus, a project's LEC is given by

$$PV(LEC*EUS) = PV(OMS) + PV(REPS) - PV(IC)$$

where EUS is the annual energy use savings (energy units/yr). Savings-to-investment ratio (SIR) is the total (PV) savings of a measure divided by its installation cost:

$$SIR = (PV(ECS) + PV(OMS) + PV(REPS))/PV(IC).$$

Some of the tedious effort of life-cycle cost calculations can be avoided by using the Building Life-Cycle Cost software, BLCC, developed by NIST. For copies of BLCC, call the FEMP Help Desk at (800) 363-3732.

Appendix B
QuickBLCC Results for Case Study

QuickBLCC (QBLCC 2.7-00) 06-30-2000/11:38:42
QBLCC filename = COOLSTOR.QI
Analysis type = Federal Analysis—Energy Conservation Projects
Project name = Cool Storage Case Study
Base date of study = 2000
Service date = 2000
Study period = 20 years
Discount rate = 3.4%
Annually recurring costs and energy costs discounted from end of year.

Number of alternatives in file = 2
Number of groups in file = 1

Note: Project alternatives displayed in increasing order of investment cost

Group code: Alternative Name	Present-Value Costs: Investment Costs*	OM&R Costs	Energy Costs	Total Life-Cycle Costs
Conventional	$0	$12047177	$0	$12047177
Cool Storage	$1600000	$0	$0	$1600000<—MIN LCC

Comparative measures are only calculated for the alternative with lowest

LCC relative to alternative with the lowest present-value investment cost.

Comparative economic measures for Cool Storage relative to Conventional:

NET SAVINGS = $10447177; SIR = 7.53; AIRR = 14.38%

Ratio of present-value energy savings to total savings = 0.00

* Investment costs include capital replacements (if any).

Residual values are not calculated.

About FEMP's New Technology Demonstration Program

The Energy Policy Act of 1992, and subsequent Executive Orders, mandate that energy consumption in Federal buildings be reduced by 35% from 1985 levels by the year 2010. To achieve this goal, the U.S. Department of Energy's Federal Energy Management Program (FEMP) is sponsoring a series of programs to reduce energy consumption at Federal installations nationwide. One of these programs, the New Technology Demonstration Program (NTDP), is tasked to accelerate the introduction of energy-efficient and renewable technologies into the Federal sector and to improve the rate of technology transfer.

As part of this effort FEMP is sponsoring a series of publications that are designed to disemminate information on new and emerging technologies. New Technology Demonstration Program publications comprise three separate series:

Federal Technology Alerts—longer summary reports that provide details on energy-efficient, water-conserving, and renewable-energy technologies that have been selected for further study for possible implementation in the Federal sector. Additional information on Federal Technology Alerts (FTAs) is provided in the next column.

Technology Installation Reviews—concise reports describing a new technology and providing case study results, typically from another demonstration program or pilot project.

Technology Focuses—brief information on new, energy-efficient, environmentally friendly technologies of potential interest to the Federal sector.

More on FTAs

Federal Technology Alerts, our signature reports, provide summary information on candidate energy-saving technologies developed and manufactured in the United States. The technologies featured in the FTAs have already entered the market and have some experience but are not in general use in the Federal sector.

The goal of the FTAs is to improve the rate of technology transfer of new energy-saving technologies within the Federal sector and to provide the right people in the field with accurate, up-to-date information on the new technologies so that they can make educated judgments on whether the technologies are suitable for their Federal sites.

The information in the FTAs typically includes a description of the candidate technology; the results of its screening tests; a description of its performance, applications and field experience to date; a list of manufacturers; and important contact information. Attached appendixes provide supplemental information and example worksheets on the technology.

FEMP sponsors publication of the FTAs to facilitate information-sharing between manufacturers and government staff. While the technology featured promises significant Federal-sector savings, the FTAs do not constitute FEMP's endorsement of a particular product, as FEMP has not independently verified performance data provided by manufacturers. Nor do the FTAs attempt to chart market activity vis-a-vis the technology featured. Readers should note the publication date on the back cover, and consider the FTAs as an accurate picture of the technology and its performance at the time of publication. Product innovations and the entrance of new manufacturers or suppliers should be anticipated since the date of publication. FEMP encourages interested Federal energy and facility managers to contact the manufacturers and other Federal sites directly, and to use the worksheets in the FTAs to aid in their purchasing decisions.

Federal Energy Management Program

The Federal Government is the largest energy consumer in the nation. Annually, in its 500,000 buildings and 8,000 locations worldwide, it uses nearly two quadrillion Btu (quads) of energy, costing over $8 billion. This represents 2.5% of all primary energy consumption in the United States. The Federal Energy Management Program was established in 1974 to provide direction, guidance, and assistance to Federal agencies in planning and implementing energy management programs that will improve the energy efficiency and fuel flexibility of the Federal infrastructure.

Over the years several Federal laws and Executive Orders have shaped FEMP's mission. These include the Energy Policy and Conservation Act of 1975; the National Energy Conservation and Policy Act of 1978; the Federal Energy Management Improvement Act of 1988; and, most recently, Executive Order 12759 in 1991, the National Energy Policy Act of 1992 (EPACT), Executive Order 12902 in 1994, and Executive Order 13123 in 1999.

FEMP is currently involved in a wide range of energy-assessment activities, including conducting New Technology Demonstrations, to hasten the penetration of energy-efficient technologies into the Federal marketplace.

Log on to FEMP's New Technology Demonstration Program Website

http://www.eren.doe.gov/femp/prodtech/newtechdemo.html

You will find links to

- An overview of the New Technology Demonstration Program
- Information on the program's technology demonstrations
- Downloadable versions of program publications in Adobe Portable Document Formats (pdf)
- A list of new technology projects underway
- Electronic access to the program's regular mailing list for new products when they become available
- How Federal agencies may submit requests for the program to assess new and emerging technologies

Printed with a renewable-source ink on paper containing at least 50% wastepaper, including 20% post consumer waste

For More Information

FEMP Help Desk
(800) 363-3732
International callers please use
(703) 287-8391
Web site: www.eren.doe.gov/femp

General Contacts

Ted Collins
New Technology Demonstration Program Manager
Federal Energy Management Program
U.S. Department of Energy
1000 Independence Ave., SW, EE-92
Washington, D.C. 20585
Phone: (202) 586-8017
Fax: (202) 586-3000
theodore.collins@ee.doe.gov

Steven A. Parker
Pacific Northwest National Laboratory
P.O. Box 999, MSIN: K5-08
Richland, WA 99352
Phone: (509) 375-6366
Fax: (509) 375-3614
steven.parker@pnl.gov

Technical Contact

Daryl R. Brown
Pacific Northwest National Laboratory
P.O. Box 999, MSIN: K8-07
Richland, WA 99352
Phone: (509) 372-4366
Fax: (509) 372-4370
daryl.brown@pnl.gov

Produced for the U.S. Department of Energy by the Pacific Northwest National Laboratory

DOE/EE-0241

December 2000